Taunton, MA
Wastewater Treatment Facility
Phase I Improvements
CWSRF 4605
Addendum No. 3
July 30, 2021

This Addendum No. 3 forms a part of the Contract Documents and modifies the Bidding Documents dated July 2nd, 2021 as noted below. Acknowledge receipt of this Addendum in the space provided in the Bid Form. Failure to do so may subject the Bidder to disqualification.

Item 1: Changes to Specification Language

Specification 13321 - Instrumentation and Controls

- Paragraph 1.3.A – Replace “Contractor” with “Instrumentation/Controls Contractor”.
- Paragraph 1.3.B – Replace “a single instrument manufacturer” with “Instrumentation/Controls Contractor”.
- Paragraph 1.3.C – Replace “system supplier” with “Instrumentation/Controls Contractor”.
- Paragraph 1.3.C – Replace “Contractor” with “General Contractor”.
- Paragraph 1.3.D – Replace “system supplier” with “Instrumentation/Controls Contractor”.
- Paragraph 1.3.E – Replace “instrumentation and control system supplier” with “Instrumentation/Controls Contractor”.
- Paragraph 1.3.F – Add “Instrumentation/Controls Contractor’s” prior to the words “factory-trained service engineer”.
- Paragraph 1.3.F – Replace “Contractor” with “General Contractor”.
- Paragraph 1.3.G – Replace “Contractor” with “General Contractor”.

Specification 15500 HVAC

- Paragraph 2.20.C.1 – Replace the entire paragraph with the following:

    1. Unit shall be capable of providing up to 100% of nominal capacity in heating at 17 deg F and 60% of nominal capacity in heating at 0 deg F. Unit shall be

capable of providing heating at outdoor temperatures as low as -13 deg F.

Specification 16000 Basic Electrical Requirements

- Paragraph 1.5.B – Replace the entire paragraph with the following:

    1. All Concrete work, including the furnish and installation of concrete electrical duct encasement, transformer pads, equipment mounting pads, concrete handholes, light pole bases, is included under DIVISION 3 - CONCRETE of these Specifications.

Specification 16085 Miscellaneous Equipment

- Paragraph 1.2.A - add the following:

    "17. Electrical Cabinet Enclosures"

- Add the following Part

    "2.18 ELECTRICAL ENCLOSURE CABINET

    A. Provide a free standing heavy-duty NEMA 4X stainless steel weather-tight and corrosion resistant custom fabricated electrical cabinet enclosures with sealed neoprene gasketing around all edges of the door. Cabinet enclosures shall be made of 14 gauge steel. The enclosure shall have the minimum dimensions as shown on the drawings. Actual sizes of the enclosures and lengths of the enclosures may be larger to incorporate all of the required equipment. The Contractor is responsible to properly size the control cabinet required at no additional cost to the Owner. Submit cabinet layout drawing with all dimensions shown for all installed devices.

    B. Control Cabinet shall have a natural mill finish.

    C. Enclosures shall have a sidewall mounted ventilation louvers with filters on the opposite sidewall. Doors shall have vault type operating handles with three point catch. Doors shall be fully gasketed with opening of sufficient size to permit ready removal of any of the equipment installed in the compartments. Doors shall have provisions for pad locking.

    D. Heavy duty padlock with six sets of keys for each lock shall be furnished. Padlocks shall have forged brass case with brass shackle. Shackle shall be $^{5}/_{16}$ inch diameter with 2½ inch clearance. Locks shall be No. 3841 as manufactured by Yale, or equal by Corbin.

    E. Pedestal roof shall slant to the rear of the enclosure. Drip shield shall extend over door opening. All exposed hardware shall be Type 316 stainless steel.

F. Cabinet enclosures shall be bolted to a concrete pad on stainless steel or aluminum feet using Type 316 stainless steel hardware."

Specification 16130 - Raceways and Fittings

- Paragraph 1.4.C – Add "and Headworks Building" after the words "wet wells".

Item 2: Changes to Drawings and Plans Language

Drawing H-1.2

- See sketch SKH-1 on sheet. Added under Item 3, below.

Drawing H-0.3

- VRF (INDOOR UNIT) SCHEDULE – In REMARKS column, add the following note for each HP unit: "Set unit speed at low."

Drawing E-0.4

- On Operation Building One Line Diagram - Demolition add Demolition hatch marks over Panel "PGLP-1" and its associated connection.

Drawing E-0.8

- Change reference of "60"x60"x18" to the electrical enclosure to "72"x60"x26""

Drawing E-0.16

- Add the following light fixture to the light fixture schedule

  "R1 Wet listed recess LED 6" lensed downlight Lithonia WF6E-LED-30K-90CR1-MW"

Drawing E-0.19

- Add "& PRIMARY GALLERY" after the word "BASEMENT LEVEL" on the Operation Building portion of the riser diagram.

Drawing E-0.20

- Replace the reference to "SLUDGE PUMP STATION #1" fiber path panel in lower middle portion of drawing to "EXISTING BLOWER/STORAGE BUILDING"

- At the RTU-3 control panel remove the control panels CP-3600, CP-6000, CP-6101, CP-6201, CP-6301, & CP-6401 and all associated TD1 connections.

Drawing E-1.2

- Add a 36” wide 12” deep control panel labeled “CP-1300” to the West end of the electrical cabinets.

Drawing E-2.4

- Add a weatherproof receptacle to Primary Clarifier #4 with identical configuration as shown for Primary Clarifier #1, #2 and #3.

Drawing E-2.5

- Add a “F7” light fixture with weatherproof switch to Primary Clarifier #4 with identical configuration as shown for Primary Clarifier #1, #2 and #3.

Drawing E-7.5

- Add (2) 60” wide 124” deep control panels labeled “CP-7301” and “CP-7302” to center area of the electrical room where 7DP1 is located.

Drawing E-9.4

- Add workstation screen reference similar to Work Station #1 to the Southwest corner of the control room with call out labeled “WORK STATION #1A”.
- Add call out “SCADA DATA OUTELT” 2D data outlet in the Southwest corner of the control room.

Item 3: Changes to Drawings and Plans

DELETE Primary Clarifier Plans and Elevations S-2.1 and **ADD** the attached Primary Clarifier Plans and Elevations S-2.1 Re-Issued Per Addendum

ADD the attached Taunton WWTP Improvements Phase I SKH-1

ADD the attached Primary Sludge Pump Station Stair Details

Item 4: Requests for Information and Clarification: The following questions were received regarding the bidding documents and subsequent addendums. Responses are in red.

1. Who is responsible to furnish and set in place the utility transformer pad, utility handholes and light pole pales? Refer to this addendum, Item 1
2. Could you please confirm the Electrical subcontractor is to furnish and install all VFD's and motor starters that are not factory installed on the equipment? Refer to specification 16000 paragraphs 1.1.B.5 & 1.1.B.6.

3. Could you please provide specifications for the Stainless-Steel Electrical Cabinets noted on Drawing E-0.8? Please include the dimensions, Drawing E-1.2 and E-0.8 show different sizes. Refer to this addendum, Item 2.
4. Drawing E-1.2 shows a Gas Detection System furnished by Division 17. Is Division 16 responsible to install and wire it? If yes, could you please provide wiring diagrams? Refer to drawing E-0.17.
5. Who is responsible for the removal/disposal of the existing Generators, pad-mount transformer, Motor Control Centers and miscellaneous electrical equipment shown as being demolished? Refer to specification 16000 paragraph 1.1.B.14 and Drawing E-0.1.
6. Could you please provide the Manufacturer and Catalogue Number for the light fixture with the designation "RI" shown on drawing E-9.6? It is not on the fixture schedule. Refer to this addendum.
7. Could you please provide the locations for Power Panels "2DP1" and "PGLP1"? I cannot locate them on the drawings. Refer to Drawing E-2.4 for 2DP1 and Refer to this addendum, Item 2, for PGLP1
8. Could you please provide the location for Screening Control Panel "CP-1300"? Refer to this addendum.
9. Please provide drawings on the BFA piping. It appears to be in the HVAC scope of work (per M-1.2) but no drawings/routing were provided. See Sketch SKH-1 attached.
10. Does Phase 1 Improvements include Blowers and appurtenant piping in the new Blower building? If so, please provide a specification for these blowers and appurtenant piping. No. blowers and piping are part of a later contract.
11. Spec section 11601 indicates weirs and baffles to be installed in the final clarifiers, is this work expected to be performed under this phase? If so, please provide a drawing indicating the work involved. No - final clarifiers are part of a later contract
12. Please provide a specification for the FRP huts indicated on DWG M-5.2 Spec 06700 attached
13. Drawing M-5.2 shows three existing pieces of equipment, FRP Dechlorination Analyzer Hut, FRP Final Effluent Sampler Hut, and FRP Defoamer Hut w/Secondary Containment. These equipment huts are all indicated to have to be relocated and kept on-line during construction based on drawing M-5.1 and then relocated to their permanent locations. Please provide more information about the equipment in these structures and what type of piping, sizes, insulation, or other mechanical work is required to complete the intended scope. Also, please confirm any temporary or permanent electrical work associated with this equipment is to be the responsibility of the EC. None of the equipment in any of these huts is to be moved or replaced. Only the huts are being replaced.

14. Specification 01810 does not address the plant water system. Part of the project scope is to replace the plant water pumps and associated piping in the Chemical Handling Building. Note that the new plant water pumps are located in the same location as the existing plant water pumps. The new pumping system is a pre-assembled skid. Please confirm the plant water system can be shut down for a sustained period to perform the plant water pump and piping replacement, and that no temporary plant water is required. The plant water system cannot be shut down for a sustained period. Contractor should carry the cost for relocating existing pumps for temporary plant water service.
15. On plans S-2.3 to S-2.5, (2) exterior staircase replacements are shown. Please provide fabrication details for the replacement metal stairs. Detail has been provided.
16. Specification Section 01665-Part 3 – B – Please confirm that all of the numbers in the table associated with the Supervision of Installation, Equipment Checkout, Field Acceptance Tests, Pre-Startup Operator Training, and Post Start-Up Services are manhours only for the Manufacturers field service representative and not number of trips. Is it mandatory for bidders to carry these Manufacturer manhours? Startup services under this specification are the responsibility of the manufacturer, not the GC. If the manufacturer is subcontracted to GC, they should carry typical manhours for startup services.
17. Specification Section 02080 – Are there any available Hazardous Soils and Groundwater Test Reports for this project or previous contracts that the contractor may review? Have previous contracts or plant staff encountered contaminated soils at the site? There is no known contamination at the site, the spec is a contingency plan if any is encountered.
18. Specification Section 02082-1.8C – Please provide the referenced Asbestos documents. Asbestos test results attached
19. Specification Section 13321-1.3 – Please clarify if the term Contractor used in this section is the I/C Contractor or the General Contractor. Refer to this addendum, Item 1.
20. Specification Section 02080 – Please consider providing individual unit price items for Suspect Soils and Contaminated Soils that will be removed from the site that would capture the requirements of this specification section. Not intended to be a bid item. Costs will be reimbursed as incurred.
21. Specification Section 02080-1.07-A – Please provide Appendix C. See attached revised section 02080 - precharacterization has not been done.
22. Specification Section – 02080-3.06 – At the 600 West Water Street are there any site improvements and permits that must be performed and acquired by the General Contractor prior to stockpiling potentially contaminated soils? Has this location been used by previous contracts for this purpose? See revised section 02080
23. Sheet S-1.4 Proposed Foundation Layout noted the footings to be 15” thick. Section 10/S-1.4 states the footing to be 2’-0” thick. Please confirm the correct thickness. The section view is correct - the footing is 2'-0" thick.
24. Sheet S-2.4 please confirm if the existing stairs are concrete or metal. Please

supply any attachment details of the stairs to the existing walls. Stairs are metal, see attached architectural details (Item 3)

25. Sheet S-6.2 Detail 20/S-6.4 notes a 10” x 12” shear key. Is this a continuous shear key? If not,please supply the spacing of this shear key along the footing. Please confirm the key size. Shear key is continuous, but is 10"Wx**2**"H, NOT 12"H.
26. Sheet S-6.6 Typical sections for Walls Type A & B notes a 10” x 6” shear key. Is this a continuous shear key? If not, please supply the spacing of this shear key along the footing. Please confirm the key size. Shear key is continuous, and is 10"Wx6"H
27. Sheet S-6.2 Foundation plan notes a 2’-6” wide step footing, and detail 19/S6.2 notes a 21” wide step footing. Please advise. Step is 2'-6" deep, with a 21" overlap as shown in detail 19
28. Sheet S-6.6 Please provide rebar details for type A & B footings, and precast curbing Rebar is as shown (no rebar required in curbing)
29. Bid Item 3 – Concrete Spalling Repair of Existing Concrete Tanks and Structures = 350 SF contains both shallow depth repairs and partial depth repairs as detailed on SG-3. The scope and unit cost of the two repairs are very different, and the Contractor has no way to properly bid this item. We request two separate unit price bid items be used for these two concrete repairs. No changes will be made to the unit price bid for Bid Item #3
30. SG-3 Partial Depth Repair detail call for 5,000 PSI, 3/8”, 660 cement concrete. Specification 03930-3.06 call for 4,000 PSI concrete. Please advise. 4,000 psi concrete as specified will be sufficient.
31. S-6.4 Please confirm the bottom of roof SIP form is 8” under the top of concrete slab EL. 42.04 as shown in Detail 21 (At Steel Beam). Confirmed.
32. S-5.2 Sections 37 & 38, and Sheet S-5.2 section 39: Please supply elevations and limits for concrete fill at the Chlorine Contact Tank channels. See Sheet M-5.2. Con- crete fill pitches from El. 7.80 at upstream end to 7.50 where it meets existing.
33. Drawing M-5.6. Please provide a specification for the pipe insulation at the 1” PVC Tank Discharge line. See Specification Section 11961, Part 2.16
34. Section 16721 3.1 F, says fire alarm raceways and boxes shall be painted red. Who is responsible for this painting – Division 16 electrical or 09003 Painting? Electrical Contractor is responsible with the intent of factory painted conduit and box covers.
35. There is no lighting detail for the new fourth primary clarifier on drawing E-2.5. Refer to this addendum, Item 2
36. Drawing E-0.20 indicates <TD1> runs between RTU-3 and CP-3600 or CP-6000. Are these N.I.C. for this phase? Same question for the runs between CP-6000 and Blower control panels CP-6101, -6201, -6301 and -6401? Refer to this addendum, Item 2
37. What are the physical locations for this equipment mentioned on drawing E-0.20: Centrifuge #1 control panel CP-7301 @ Solids Handling Building Refer to this addendum Item 2

Centrifuge #2 control panel CP-7302 @ Solids Handling Building Refer to this addendum.
Screenings control panel CP-1300 @ Headworks Building Refer to this addendum.
SCADA Workstation #1A @ Operations Building Refer to this addendum.

38. Drawing E-0.20 shows a 2nd SCADA fiber optic patch panel for Sludge PS #1 – is this intended for the existing (old) Blower building as indicated? Refer to this addendum, Item 2
39. The riser drawing E-0.19 does not show the new fire alarm devices within the Primary Sludge PS as indicated on Drawing E-2.6. Refer to this addendum, Item 2
40. Section 16000 1.5, says "RELATED WORK NOT INCLUDED" and lists excavation and backfill, etc as well as concrete work. Why is this being changed by Q&A in Addenda#2. Please formally address these scope/spec discrepancies. Refer to this addendum, Item 2
41. General note 1 on Drawing E-0.1 says the general contractor is providing concrete pads. Please clarify who is responsible for concrete pads. General contractor as per the note.
42. Who is responsible for providing the handholes on drawing E-0.2 Refer to this addendum, Item 2
43. Are the fiber optic communications cables for I&C and/or fire alarm intended to enter and pass through the same handholes as the power on E-0.2? Yes.
44. Please clarify MBE/WBE goal percentages on the project for the general contractor scope. Specification sections 00100, 01010 and 01067 have different requirements. The goals are 4.9% and 4.6%
45. Please clarify who is responsible for paying for permits including but not limited to building, NPDES, electrical, plumbing and mechanical? The specification has conflicting information. The City will waive fees on all city-issued permits. Municipalities are fee exempt from NPDES permit.
46. Clarify the responsibility for routine maintenance on new equipment and materials in the one year from acceptance? The specification 01800-Maintenance is unclear. Veolia will be responsible for routine maintenance after startup.
47. Vibration monitoring is specified as the engineer's responsibility in 02160-Excavation Support and the contractor's responsibility in 02399 – Geotechnical Instrumentation Preconstruction Survey Preconstruction Vibration Monitoring. Please clarify. No vibration monitoring is needed.
48. Please define the scope for repointing masonry and EFIS repair on existing buildings. Please provide estimated quantity. Notes on architectural drawings require this "as necessary". previously answered
49. Who is responsible for first fill of chemicals for hypo and lime systems outside of what is required for startup under specification 01710-Startup. The operator (Veolia)

50. Is the entire existing roofing system including rock ballasts considered Asbestos Containing Materials and to be abated per 02082-Asbestos Abatement? No - only materials identified are considered ACMs
51. 02160-Excavation Support - Clarify how to quantify an unforeseen site condition (boulders/rock) in areas requiring temporary excavation support? MGL states the following "if, during the progress of the work, the contractor or the awarding authority discovers that the actual subsurface or latent physical conditions encountered at the site differ substantially or materially from those shown on the plans or indicated in the contract documents either the contractor or the contracting authority may request an equitable adjustment in the contract price of the contract applying to work affected by the differing site conditions." This will be established with the successful bidder before awarding the contract.Contractor should not carry additional costs for unforeseen site conditions.
52. Per specification 11320-Primary Clarifier Equipment, it states the primary clarifier influent is to be designed to accommodate 2.6 MGD with a max of 6.3 MGD. Please confirm this is correct. This is correct - 2.6 MGD per clarifier is max day (for solids removal), 6.3 mgd is max hour (for hydraulics)
53. Is the lime piping scheduled to be painted in the field? Buried lime piping, and piping within the silo enclosure does not need to be painted. If PVC pipe is used, and it is exposed and above grade, it must be painted or otherwise protected from UV.
54. Please clarify where the rotary screw compressor will be installed in relation to the lime system? It is intended to be installed on the lime silo foundation next to the silo.
55. Provide detail for patching to concrete/masonry openings for old/abandoned utility penetrations. (HVAC/Plumb/Process/Electrical) Generally, penetrations are intended to be cut and capped.
56. Please clarify what that the general contractor's or electrical contractor's scope of responsibility is with respect Bid package #3-I&C/SCADA?a. Whom is responsible for mounting/ installing devices, conduit, wiring/ect, mounting panels, housekeeping pads, etc.? Refer to electrical drawing E-0.1 for housekeeping pads and and specification 16000 paragraph 1.1.
57. In walkthrough a junction box/pad and conduit was identified in the yard north-west corner of CCT. It appears to be in footprint of new CCT extension. Please clarify if this needs to be relocated. To be determined in the field with successful bidder and handled as a change if needed.
58. Please provide a detail for the mounting of aluminum railings on roof slated for roofing replacement. Replacement is to be in-kind. Match existing.
59. Please clarify scope for new aluminum railings on the solids handling building roof. Railing is only required adjacent to the hatch as shown on Sheet A-7.1
60. Please provide detail of new stair and railings in the operations building lower level? Reference drawing A-9.2 Lower Level Plan. There are no new stairs. Stairs are existing.
61. Please provide detail on metal staircases from primary sludge pipe gallery roof to ground. Reference drawing S-2.5. Refer to this addendum, Item 3
62. Clarify mounting of aluminum hand rails on the curbing of the primary piping

gallery roof? Railing shown on M-2.2 on North and East face of gallery appear to be on a curb.

a. Does the flashing need to be removed/abated/replaced, as this roofing is not shown to be replaced? Replace in kind. Flashing does not need to be removed if replacement does not dam- age it.

63. Can you provide details on the primary clarifier #4 Walkway (Walkway Bridge Pan – Dwg S-2.8) that is depicted as a 5-foot cantilevered extension to the vendor's bridge? Are steps to be provided form walkway down to roof deck? Sheet S-2.8 has a typo - the roof curb elevation is 33.71, not 31.71 as shown. No step is required.
64. Metal roof deck shown on drawing S-6.3 is neither sized nor specified. Please clarify. Clarify finish the finish for the roof beams shown on S-6.3. There is no metal roof deck. S- 6.3 shows a framing plan for the concrete roof deck and insulation shown on S-6.4
65. There is a discrepancy between railing scope in headworks on mechanical and structural drawings. Please clarify which is correct. Mechanical drawings show the correct scope of railings.
66. Does the Chlorine manhole get railings on the entire perimeter? Yes
67. Are the new refrigerators (2) to be furnished and installed by Contractor? If so, can you provide details on the proposed product? The lab refrigerator is to be supplied as spec'd in Sec- tion 11500. The break room refrigerator is not part of this contract.
68. Is the infill of the louvers/equipment demolished in primary gallery, chemical building and solids handling building included in the project? If so, please provide details for infill. Infill is to match existing (i.e. CMU/brick).
69. Please identify equipment/piping/etc. to be demolished and removed in the first floor mechanical room of operations building. (Room 918) All equipment and piping in room to be removed. This includes AC-1 and all associated ductwork and piping. EF-1 and associated ductwork and controls. Unit heater UH-1 and associated piping. And Roof exhaust hood EA-1 and ductwork and controls.
70. Drawing M-7.2 depicts a new Scum Concentrator to be installed in the Solids Handling Building but no spec. was provided. Previously answered addendum #2
71. As it appears that the roofing system for the Primary Pipe Gallery is not slated to be replaced, what will be required for roofing repairs with any work (new HVAC units and Plumbing roof drains) that impacts this roofing? Penetrations to be made water tight, disturbed areas re- paired.
72. Is it the intent to replace the underslab plumbing piping in the basement(Dwg P-9.3) and 1st Floor Bathrooms(Dwg P-9.5), as no floor demo/repairs are called out or depicted? Yes the underslab piping is to be removed. Contractor shall demo existing slab as needed for pipe demolition and new pipe installation and provide new slab to replace what was demolished with standard building basement slab depth and rebar configuration.
73. Are there any restrictions to the reconstruction of the Administration area such as providing temporary facilities (lab areas, bathrooms, lockers, office space, control room space, ect.)? Coordinate with owner on expectations on

sequencing for temporary labs and bathrooms – determination to be added to front ends

74. With reference to the pipe schedule on Dwg M-0.1 and Restrained Joint/Thrust Block Table on Dwg CD-2:
    a. Under the various piping systems the joint type is called out as DI – Mechanical Joints, while spec. section 02622 notes to supply the piping as specified and allows for the Contractor to supply push-on or MJ piping. Please clarify what will be allowed for each DI piping system.
    b. Is there a requirement for supplying restrained joints/thrust for any of the process piping systems, as the requirement for restraining piping or providing thrust blocks appears to only be listed on Dwg CD-2 for water and sewer force mains.

    There is no spec section 02622, DI pipe is in 02618. Follow pipe schedule on M-0.1 for joint type. Thrust blocks are covered in Section 11961, part 2.15 (D).
75. On M-1.5 are the plant water and lime slurry to be run under the silo foundation and turn up into the silo or are they run on top of the foundation (it appears they are) are they to be heat traced and insulated? Due to the depth of the silo foundation they are shown on top of the foundation. They do not need heat tracing or insulation.
76. Dwg G-2.1 provides summary table of the plant design flow conditions only. As there is no bypass or maintenance of flow spec. section, what are the flows to be considered for bypassing around each section of the plant? Due to available redundancies (grit chambers, primary clari- fiers), bypass is not anticipated. However, the main lift pump station is capable of pumping 22 MGD, so if bypass is needed then that would be the maximum flow.
77. There are no unit priced items to cover unsuitable excavation below grade, rock or boulders, or new gravel or stone supply on this project? This will be established with the successful bidder before awarding the contract.Contractor should not carry additional costs for unforeseen site conditions.
78. As this GC bid is to provide (2) separate prices: Bid Package 1(GC only) &Bid Package 1+2(GC with electrical):
    a. For Package 1 – Whom is to figure on supplying all of the temporary electrical work to maintain operations (MCCs, equipment) that is required on this project? Refer to specification 16000 paragraphs 1.12 & 1.13.
        1. Headworks Building is slated for building demo, while equipment in the building is to be maintained. Whom is responsible for providing temp. power for this equipment during reconstruction? Electrical contractor to provide temporary support with plywood backboard mounted to

partially buried support legs. Switchovers are to be phased, existing service to remain active until the building is powered from the new service.

2. Other buildings appear to be slated for electrical replacement, therefore temp. power will be required. Temporary power is indicated on the electrical one line diagrams.
3. With a new service being provided, temporary power needs to be provided during switchovers. Switchovers are to be phased, existing services to remain active until all the buildings are powered from the new service.

b. For Package 1 - Whom is responsible for furnishing/installing transformer pad? Refer to this Addendum.

79. Dwg G-1.4 - Per Freshwater Wetland Note 6 – All excess soil must be stockpiled outside
Buffer and Resource areas. Where will be allowed to stockpile material slated for reuse on-site? The staging area shown on Sheet C-1.16, and/or coordinate with Veolia operations staff
80. Dwg C.16 – calls for the Lime Silo and related foundation to be demo'd:
    a. Will VNA empty and cleanout remaining lime prior to demo?
    No, GC will be responsible for for cleanout. Veolia will attempt to draw down existing lime
81. Pipe schedule on Dwg M-0.1 lists the Sodium Bisulfite (SB) to be heat traced and insulated. As we are required to re-route this piping underground around CC Tank addition only, is this insulation/heat tracing required for this underground portion? Yes, the rerouting is shown on C- 1.15. Yes, the entire pipe must be insulated and heat traced, including buried pipe.
    a. Nothing is called out on the drawings for insulation or heat tracing.
82. Section "09003 – Resilient Floors – General" refers to section 09650 for details which is not included in specifications There is no resilient flooring - disregard.
83. Drawing P-2.1 and P2.2 shows new waste and vent piping which appears to be under slab. Are we required to remove existing concrete, excavate, demo the piping, backfill and recast slab in these locations? If so, please provide structural detail Yes the underslab piping is to be removed. Contractor shall demo existing slab as needed for pipe demolition and new pipe installation and provide new slab to replace what was demolished with standard building basement slab depth and rebar configuration.
84. Drawing P-5.1 and P5.3 shows demolition and installation of floor drain and waste piping, Are we required to remove existing concrete, excavate, demo the piping, backfill and recast slab in these locations? If so, please provide structural detail Yes the underslab piping is to be removed. Contractor shall demo existing slab as needed for pipe demolition and new pipe installation and provide new slab to replace what was demolished with standard building basement slab depth and rebar configuration.
85. Drawing P-9.1 and P9.3 shows demolition and installation of floor drain and

waste piping, Are we required to remove existing concrete, excavate, demo the piping, backfill and recast slab in these locations? If so, please provide structural detail. Yes the underslab piping is to be removed. Contractor shall demo existing slab as needed for pipe demolition and new pipe installation and provide new slab to replace what was demolished with standard building basement slab depth and rebar configuration

86. The finish schedule on A-0.1, shows new ACT ceiling in multiple areas of the Operations Building, are there existing ceilings that need to be demolished? Yes, majority of ceilings are being replaced
87. The finish schedule on A-0.1, shows new Flooring in multiple areas of the Operations Building, is there existing flooring in these locations that need to be demolished? Floor finish demo will be required in the following rooms: VCT in 911 & 915 and ceramic tile in 903, 904, 913, 930 & 931
88. In the basement of the operations building, currently at the location of the showers in Room 904, there is a wood structure with lockers and furniture inside, are we to demolish this structure? Please provide further detail.
89. Are we required to provide any temporary provisions to accommodate the Operations Building Staff while we are renovating? Yes, Coordinate with Veolia on expectations on sequencing for temporary offices, labs and bathrooms
90. Are there any restrictions or existing services requirements to consider while renovating the Operations Building? This questions is not clear
91. Drawing P-9.4 in admin. Building first floor shows a sink labeled “LS-1” in the chemical analysis lab. What is the brand name and specification for this sink and fixtures? Refer to A-9.1 and A-9.2 for Lab Sink requirements.
92. Drawing P-9.4 in admin. Building first floor shows a sink labeled “DW-1” in the chemical analysis lab. What is the brand name and specification for this sink and fixtures? Refer to A-9.1 and A-9.2 for Lab Sink requirements.
93. Dwg S-2.1 depict flowable fill to be provided between the PS Tank 4 – south wall and the existing PS-3 tank wall. How is this formwork to be installed and stripped with only 12-inches of spacing? Flowable fill does not require forms, the intent is just to backfill the space, and soil backfill is impractical at that location.
94. Is there existing sheeting left in place around the chlorine contact tank? If so, where is it located and at what elevation was it left at? There is no existing sheeting indicated on the exist- ing record drawings, so it is unlikely that there is any left in place.
95. Section 07002 Paragraph 1.01A states cover work under the following Section 03350, could you please provide this section it in not listed in the spec book. Previously answered.

END OF DOCUMENT

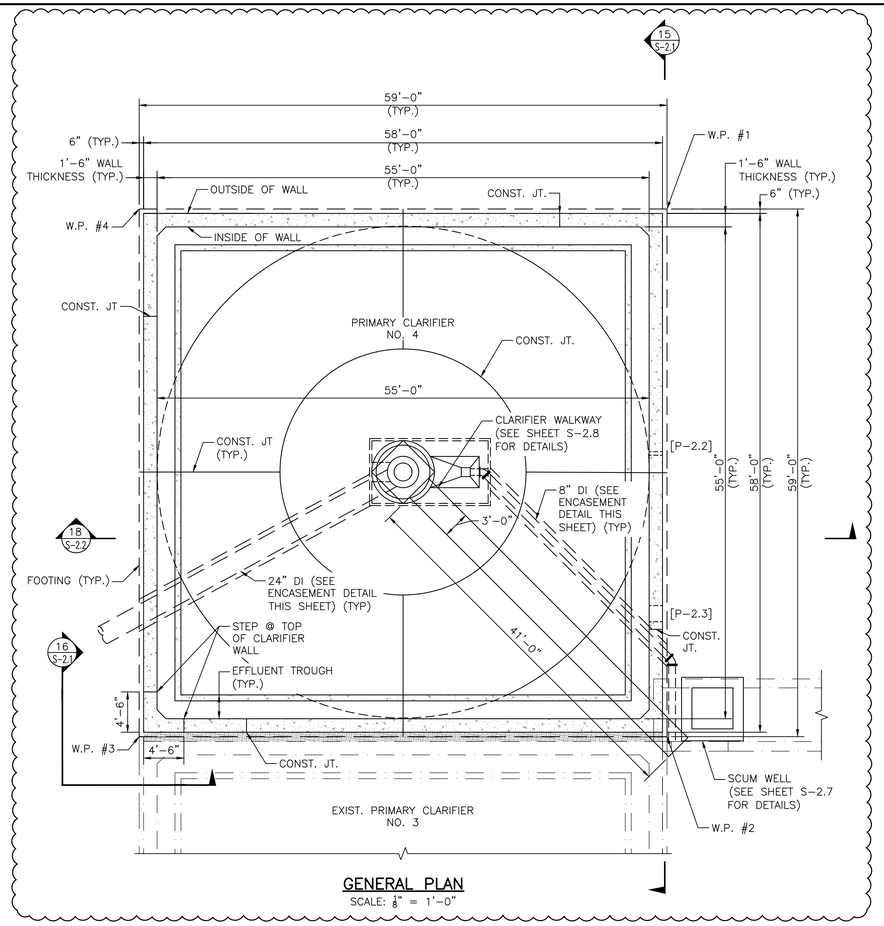

GENERAL PLAN
SCALE: 3/8" = 1'-0"

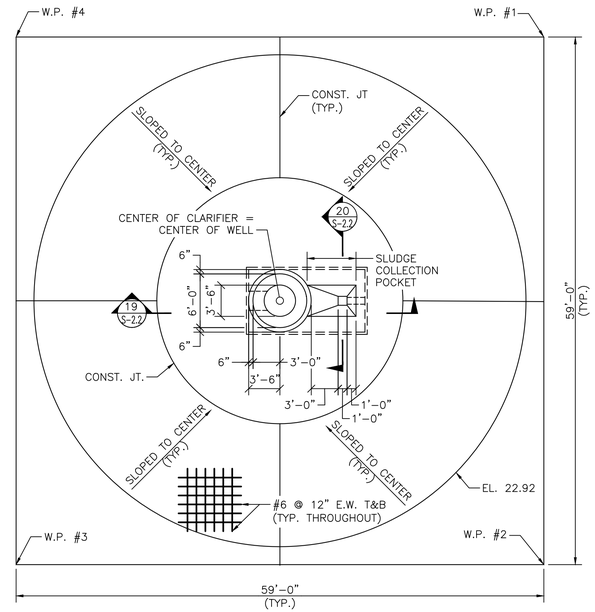

FOOTING PLAN
SCALE: 3/8" = 1'-0"

NOTES:

1. SEE MECHANICAL SHEETS FOR EQUIPMENT DETAILS

	NORTHING	EASTING
W.P. #1	33353424.08	9189159.93
W.P. #2	33352725.18	9189046.79
W.P. #3	33352838.31	9188347.89
W.P. #4	33353537.22	9188461.03

1

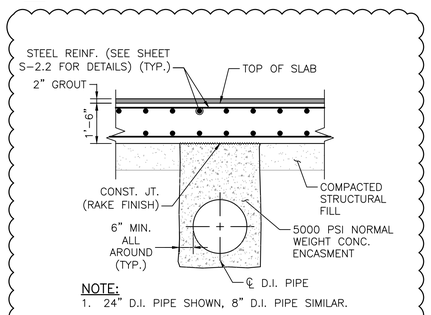

NOTE:
1. 24" D.I. PIPE SHOWN, 8" D.I. PIPE SIMILAR.

PIPE ENCASEMENT DETAIL
SCALE: 3/8"=1'-0"

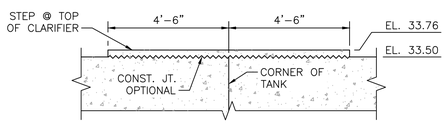

SECTION 16 S-2.1
SCALE: 3/8" = 1'-0"

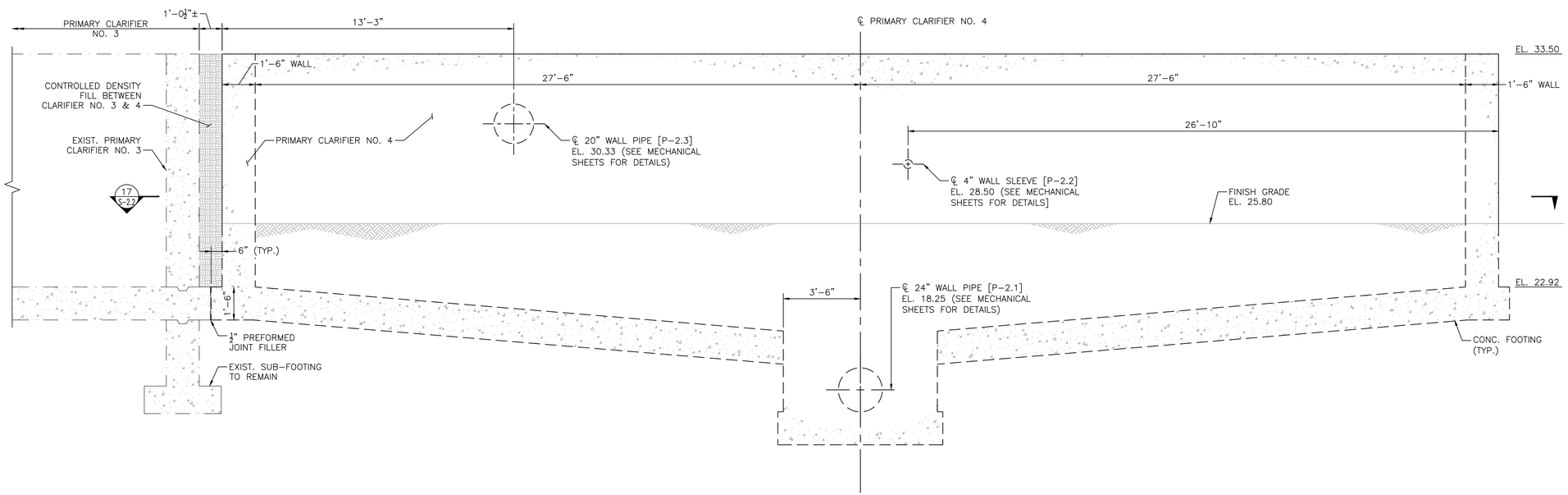

SECTION 15 S-2.1
SCALE: 3/8" = 1'-0"

PREPARED BY

BETA
www.BETA-Inc.com

REGISTERED PROFESSIONAL

SUBCONSULTANT

PROJECT

Taunton Wastewater Treatment Facility Improvements Phase 1

TAUNTON, MA

TITLE

Primary Clarifier Plans and Elevations

AS RE-ISSUED PER ADDENDUM

NO.	REVISIONS	DATE
1	CONCRETE PIPE ENCASEMENT	07/21

DRAWN BY:	BN
DESIGNED BY:	BN
CHECKED BY:	TMW
ISSUE DATE:	7/2/2021
BETA JOB NO.:	6050

SCALE

AS SHOWN

SHEET NO. S-2.1

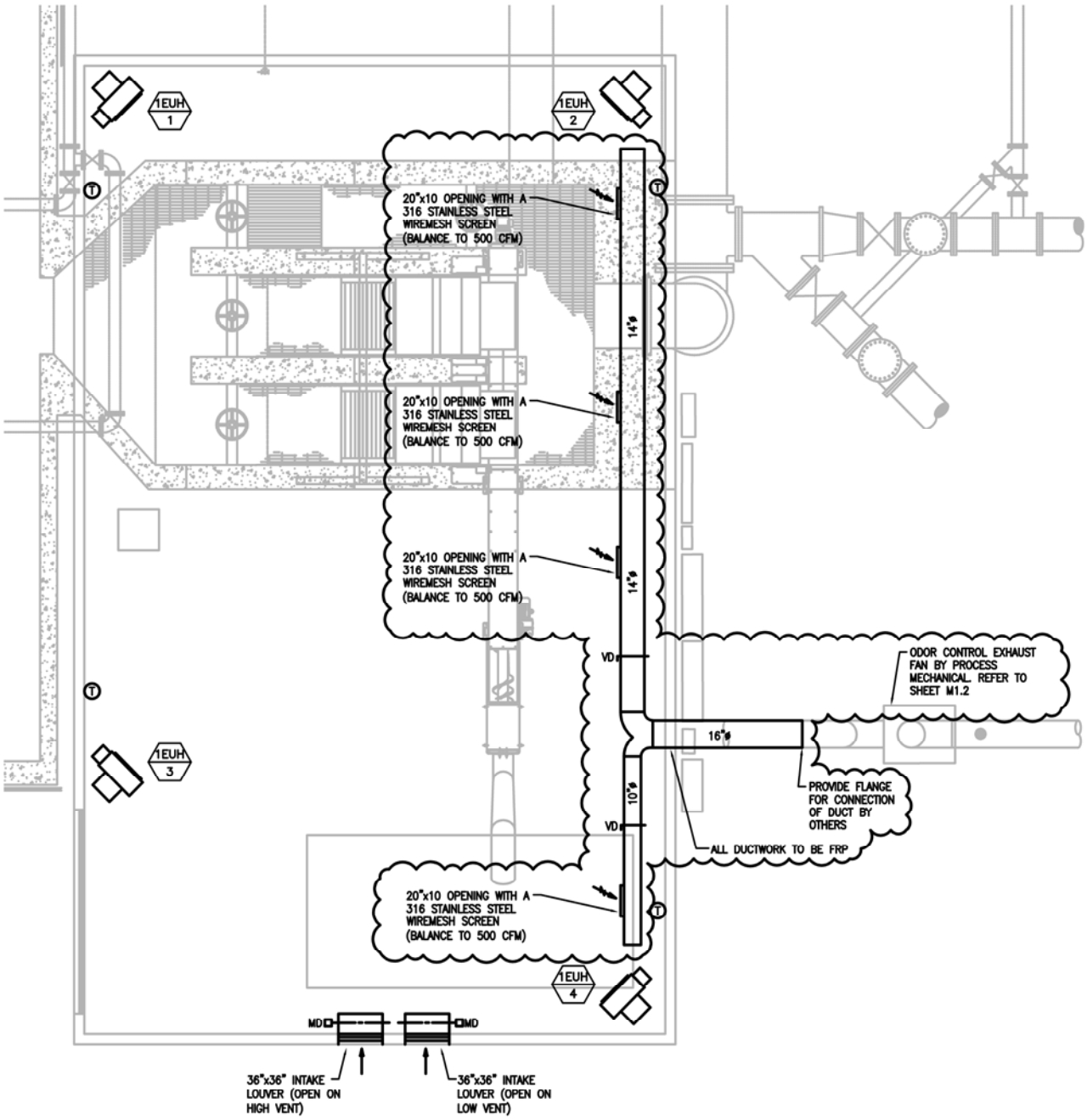

Reference Drawing: H-1.2

BETA
www.BETA-Inc.com

SKH-1

Taunton WWTP Improvements

Phase 1

Scale: 1/8"=1'-0"

W:\T-Projects\T-18009.00 - Taunton WWTF Upgrades\HVAC Department\Phase 1\18009.00 Hvac Headworks-Phase 1.dwg Plot Date: 7/29/2021 10:52 AM

Primary Sludge Pump
Station Stair Detail

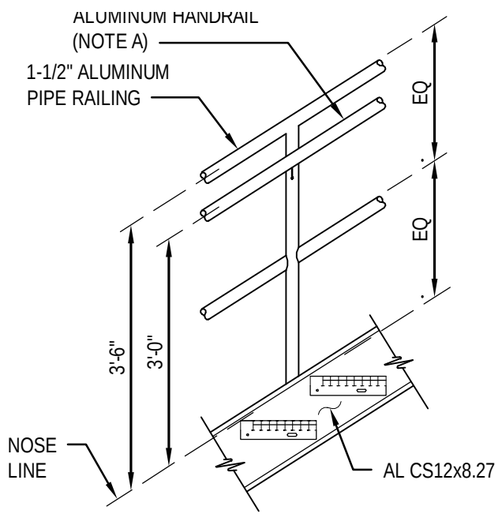

ELEVATION

NOTE:

A. HANDRAIL TO TERMINATE INTO A POST OR ANOTHER RAIL AT THE TOP AND BOTTOM OF STAIRS

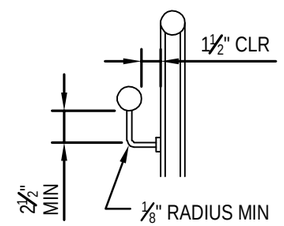

SECTION

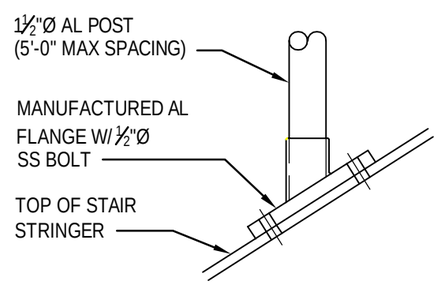

TOP MOUNT DETAIL

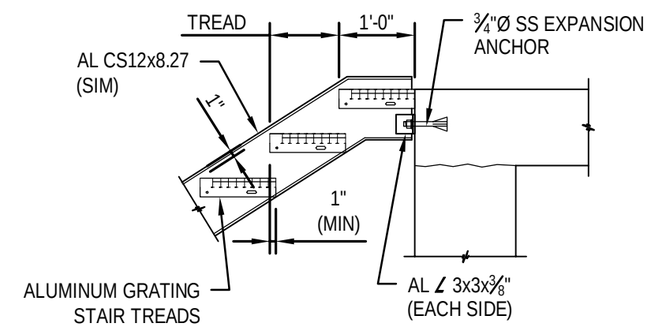

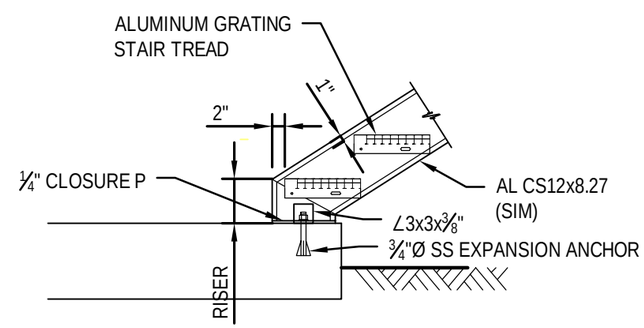

BETA
www.BETA-Inc.com

Taunton Wastewater Treatment
Facility Improvements - PHASE 1
Taunton, MA

PRIMARY SLUDGE PUMP
STATION STAIR DETAILS
Scale = NTS

Section 06700 FRP
Enclosures

SECTION 06700

FRP ENCLOSURES

PART 1 - GENERAL

1.01 GENERAL REQUIREMENTS

A. The Drawings and general provisions of the Contract, including General and Supplementary Conditions and all sections within DIVISION 1-GENERAL REQUIREMENTS are hereby made a part of this Section.

1.02 SCOPE OF WORK

A. Furnish, deliver to the job site, and install three (3) pre-engineered enclosures to replace the existing enclosures housing:
   a. Dechlorination Pumps
   b. Final Effluent Sampler
   c. Defoamer Pumps

1.03 RELATED SECTIONS

A. Section 03300 - Cast-in-Place Concrete

B. Division 16: Electrical

1.04 REFERENCES

A. ASTM C 518 - Standard Test Method for Steady-State Heat Flux Measurements and Thermal Transmission Properties by Means of the Heat Flow Meter Apparatus
B. ASTM D 256 - Standard Test Method for Determining the Pendulum Impact Resistance of Notched Specimens of Plastics.
C. ASTM D 638 - Standard Test Methods for Tensile Properties of Plastics.
D. ASTM D 732 - Standard Test Method for Shear Strength of Plastics by Punch Tool
E. ASTM D 790 - Standard Test Methods for Flexural Properties of Unreinforced and Reinforced Plastics and Electrical Insulating Materials.
F. ASTM D 792 - Standard Test Method for Specific Gravity (Relative Density) and Density of Plastics by Displacement.
G. ASTM D 1622 - Standard Test Method for Apparent Density of Rigid Cellular Plastics.
H. ASTM D 2583 - Standard Test Method for Indentation Hardness of Rigid Plastics By means of a Barcol Impressor.
I. ASTM E 84 - Standard Test Method for Surface Burning Characteristics of Building Materials.

1.05 SUBMITTALS

A. Submit under provisions of Section 01300.

B. Product Data:
   1. Provide manufacturer's standard details and catalog.
   2. Provide data demonstrating compliance with referenced standards.
   3. Provide installation instructions.

C. Shop Drawings: Submit drawings showing layout, dimensions, anchorages and accessories.

D. A list of three or more projects in satisfactory service for not less than three years with enclosures identical to those being proposed. For each project, include name, address and telephone number of the engineer, the contractor, and the plant manager.

1.06 DELIVERY STORAGE AND HANDLING

A. Store products on flat surface and protect from construction traffic, and damage.

PART 2 PRODUCTS

2.01 MANUFACTURER

A. Building shall be Model: WFS 1009—07 as manufactured by Warminster Fiberglass Company, P. O. Box 188, Southampton, PA 18966-0188; ww.warminsterfiberglass.com Tel. (215) 953-1260, Fax (215) 357-7893 or approved equivalent.

2.02 DESIGN

A. Design factory-fabricated, pre-engineered structures to withstand, at minimum:
   1. 125 mile per hour wind load
   2. 30 PSF snow-load

2.03 MATERIALS

A. Molded composite: Exterior and interior resin-fiberglass laminate with foam core.
   1. Laminate: Polyester resin and chopped strand fiberglass; minimum glass Content of 25%.
      a. Exterior surface: White gel coat with low luster finish, smooth and free from fiber pattern, roughness, or other irregularities.
      b. Exterior laminate: 1/8 inch thick, minimum, chemically bonded to gel coat. Interior laminate to be 1/8 inch thick, minimum.
      c. Interior laminate: White color, encapsulate core in place.
      d. Laminate properties:
         1) Tensile strength (ASTM D 638): 11,000 PSI
         2) Flexural strength (ASTM D 790): 18,000 PSI
         3) Shear strength (ASTM D 732): 12,000 PSI
         4) Barcol hardness (ASTM D 2583): 40.
         5) Impact (ASTM D 256): 12 ft lbs/per inch.
         6) Density/specific gravity (ASTM D 792): 93.6 PCF/1.5.

7) Surface burning characteristics (ASTM E 84): Flame spread, less than 150; smoke density, less than 1000.

2. Core
   a. Rigid closed cell, self-extinguishing, polyisocyanurate foam with a density of 2.0 pounds per cubic foot. Core shall be 2 inch thick with a minimum insulating value of R 12.
   b. Core Properties:
      1) Thermal conductivity (ASTM C 518): 0.13 BTU Inch/ Hr. SF F.
      2) Density/specific gravity (ASTM D 1622): 2.0 PCF/ .03.
      3) Surface burning characteristics (ASTM E 84):
      4) Flame spread, 35 smoke density, 240.

B. The manufacturer shall maintain a continuous quality control program and upon request shall furnish to the engineer certified test results of the physical properties.

2.04 **COMPONENTS**

A. Door: One-piece, resin transfer molded (RTM) in matched metal molds to produce an industrial quality door, which exhibits a smooth finished, seamless, monolithic, warp-free composite consisting of a gel-coat, fiberglass reinforcement, polyester resin, insulating core, and internal reinforcements with all mortises, openings, recesses, and pockets molded in place.
   1. Mount door with continuous stainless steel hinge.
   2. Door gasket: Neoprene sponge rubber bulb type gasket with flexible lock to retain permanent grip.

B. Latch: Provide the three point latch with stainless steel padlock hoop, and door stop with chain.

C. Base Mounting Flange Gasket: 1/2 inch thick by 4 inches wide closed cell neoprene sponge rubber to provide weather tight seal around the building perimeter.

D. Louvers: Provide two, 6-inch diameter PVC wall louvers with manually adjustable damper and insect screen.

E. Lifting Eye Bolts: Provide 3/4 inch stainless steel eye bolts in roof.

2.05 PRE-ENGINEERED FIBERGLASS COMPOSITE ENCLOSURES

A. Provide factory-assembled enclosures.

B. Encapsulated aluminum extrusion 3 inches wide by 1 1/2 inches high by 0.125 inch thick with a 1 inch wide side flange shall be encapsulated into each corner of end panels (full height) and 4 inches wide by 2 1/2 inches high by 0.125 inch thick with a 1 inch wide side flange around the entire roof perimeter to maintain flatness, straightness, and structural integrity. Integral internal flanges on mating panels shall be provided for bolting the sides, ends and roof to the encapsulated aluminum extrusions.
   1. Aluminum extrusions: Incorporate threaded inserts on 12-inch centers for internal bolting to mating panel flange during assembly.

2. Assemble panels with 3/8 inch diameter stainless steel bolts on 12- inch centers and a 1/4 inch thick by 3 inches wide urethane foam gasket for a weather tight seal at all joints. Assembly bolts shall not penetrate the exterior wall of the structure.
3. Structurally reinforce wall and roof panels with steel and aluminum extrusions to meet loading conditions.
   a) Galvanized steel mounting channel reinforcement: 0.078 inch thick by 1 5/8 inch high by 1 5/8 inches wide. Mechanically attach to the interior surface with aluminum pop rivets on 12-inch centers, on all walls.
   b) Steel reinforcement shall be encapsulated in walls at end and roof perimeter, to form a continuous, one-piece molded composite wall or roof panel
4. Provide wall panels with an integral 4 inches wide internal mounting flange pre-drilled on 12-inch centers with 5/8 inch diameter holes for attaching to concrete pad.

2.06 ACCESSORIES

A. Anchor bolts for attaching structure to concrete pad:
   1. Buildings: 1/2 inch diameter stainless steel expansion anchors.

PART 3 – EXECUTION

3.01 EXAMINATION

A. Verify that concrete is level and true to plane and of correct dimensions to receive structure. Correct any deficiencies before proceeding.

3.02 INSTALLATION

A. Layout anchor bolt pattern according to drawings. Drill holes of depth and diameter required by anchor bolt manufacturer.
B. Install structure in accordance with manufacturer's instructions.
C. Erect structures true to line and plumb, free of twist and warp.
D. Install and test accessories in accordance with manufacturer's instructions.

3.03 ADJUST AND CLEAN

A. Adjust components for proper operation.
B. Leave project site clean and free of debris.

END OF SECTION

Section 02082
Appendix -
Asbestos Results

EMSL Analytical, Inc.

440 Washington Street, Suite 2 Weymouth, MA 02188
Tel/Fax: (781) 682-2206 / (781) 682-2207
http://www.EMSL.com / WeymouthLab@emsl.com

EMSL Order: 642000944
Customer ID: BETA25
Customer PO: 6050
Project ID:

Attention: Matthew Alger
Beta Group
701 George Washington Highway
Lincoln, RI 02865

Project: 6050 / WWTF / Taunton, MA

Phone: (401) 333-2382
Fax:
Received Date: 06/08/2020 8:50 AM
Analysis Date: 06/17/2020
Collected Date:

Test Report: Asbestos Analysis of Bulk Materials via EPA 600/R-93/116 Method using Polarized Light Microscopy

			Non-Asbestos		Asbestos
Sample	**Description**	**Appearance**	**% Fibrous**	**% Non-Fibrous**	**% Type**
SH-1 *642000944-0001*	Built-up Roof	Black Fibrous Heterogeneous		80% Non-fibrous (Other)	20% Chrysotile
SH-2 *642000944-0002*	Gray Caulk at Bottom Edge of Brick Wall on Roof	Black Fibrous Homogeneous	10% Cellulose	90% Non-fibrous (Other)	None Detected
SH-3 *642000944-0003*	Door F2 - Gray Exterior Door Frame Caulk	Black Non-Fibrous Homogeneous		100% Non-fibrous (Other)	None Detected
SH-4 *642000944-0004*	Door F2 - White-Gray Exterior Door - Door Frame Caulk	White Non-Fibrous Homogeneous		100% Non-fibrous (Other)	None Detected
SH-5 *642000944-0005*	Door F2 - White Interior Door Frame Caulk	Tan Non-Fibrous Homogeneous		100% Non-fibrous (Other)	None Detected
AB-6 *642000944-0006*	Door A1 - Gray Exterior Door Frame Caulk	Black Non-Fibrous Homogeneous		100% Non-fibrous (Other)	None Detected
AB-7 *642000944-0007*	Door A1 - Gray Interior Door Frame Caulk	Gray Non-Fibrous Homogeneous		100% Non-fibrous (Other)	None Detected
AB-8 *642000944-0008*	Addition Roof - Built-up Roof	Black Fibrous Heterogeneous		70% Non-fibrous (Other)	30% Chrysotile
AB-9 *642000944-0009*	Black/Gray Flashing Around HVAC Hood Vent	Black Fibrous Homogeneous		70% Non-fibrous (Other)	30% Chrysotile
AB-10 *642000944-0010*	Entire Perimeter - Gray Caulk at Edge Flashing	Gray Non-Fibrous Homogeneous		100% Non-fibrous (Other)	None Detected
AB-11 *642000944-0011*	Older Roof - Gray Roof Patching Material	Black Fibrous Homogeneous	5% Glass	65% Non-fibrous (Other)	30% Chrysotile
AB-12 *642000944-0012*	Gray Caulk at Seams of Interior Parapet Covering	Silver Non-Fibrous Homogeneous		100% Non-fibrous (Other)	None Detected
AB-13 *642000944-0013*	Black/Gray Flashing Around HVAC Hood Vent	Black Fibrous Homogeneous		70% Non-fibrous (Other)	30% Chrysotile
AB-14 *642000944-0014*	Older Roof - Built-up Roof	Black Fibrous Heterogeneous	30% Cellulose	70% Non-fibrous (Other)	None Detected
AB-15 *642000944-0015*	Fiberboard Shingles Over Interior of Parapet	Black Fibrous Homogeneous	20% Cellulose 10% Glass	70% Non-fibrous (Other)	None Detected
PS-16 *642000944-0016*	Gray Roof Crack Patching Material	Black Fibrous Homogeneous	10% Cellulose	90% Non-fibrous (Other)	None Detected

Initial report from: 06/17/2020 16:12:50

EMSL Analytical, Inc.
440 Washington Street, Suite 2 Weymouth, MA 02188
Tel/Fax: (781) 682-2206 / (781) 682-2207
http://www.EMSL.com / WeymouthLab@emsl.com

EMSL Order: 642000944
Customer ID: BETA25
Customer PO: 6050
Project ID:

Test Report: Asbestos Analysis of Bulk Materials via EPA 600/R-93/116 Method using Polarized Light Microscopy

			Non-Asbestos		Asbestos
Sample	**Description**	**Appearance**	**% Fibrous**	**% Non-Fibrous**	**% Type**
PS-17 *642000944-0017*	Black Flashing/Sealant at Interior of Parapet	Black Non-Fibrous Homogeneous		100% Non-fibrous (Other)	None Detected
PS-18 *642000944-0018*	Brown Exterior Wall Plaster	Brown Non-Fibrous Homogeneous		100% Non-fibrous (Other)	None Detected
PS-19 *642000944-0019*	Black Tar Barrier Between 2 Layers Roof Concrete	Black Non-Fibrous Homogeneous	10% Cellulose	90% Non-fibrous (Other)	None Detected
PS-20 *642000944-0020*	Roof Concrete	Gray Non-Fibrous Homogeneous		100% Non-fibrous (Other)	None Detected
PS-21 *642000944-0021*	White Roof Crack Patching Material	Gray Non-Fibrous Homogeneous		100% Non-fibrous (Other)	None Detected
PS-22 *642000944-0022*	Gray/Black Sealant on Metal Flashing at Parapet	Black Fibrous Homogeneous	20% Cellulose	80% Non-fibrous (Other)	None Detected
PS-23 *642000944-0023*	Caulk at Base of Goose Neck Vent Pipes	Tan Non-Fibrous Homogeneous		100% Non-fibrous (Other)	None Detected
ST1-24 *642000944-0024*	Dark Gray Exterior Door Frame Caulk	Brown Non-Fibrous Homogeneous		100% Non-fibrous (Other)	None Detected
ST1-25 *642000944-0025*	Light Gray Exterior Door Frame Caulk	Gray Non-Fibrous Homogeneous		100% Non-fibrous (Other)	None Detected
ST1-26 *642000944-0026*	Rubber Roof System	Black Fibrous Heterogeneous	10% Glass	90% Non-fibrous (Other)	None Detected
ST1-27 *642000944-0027*	Black Caulk at Edge of Parapet	Black Non-Fibrous Homogeneous		100% Non-fibrous (Other)	None Detected
ST1-28 *642000944-0028*	Yellow/White Wall Material Above Exterior Door	Gray Non-Fibrous Homogeneous	5% Glass	95% Non-fibrous (Other)	None Detected
ST2-29 *642000944-0029*	Dark Gray Exterior Door Frame Caulk	Black Non-Fibrous Homogeneous		100% Non-fibrous (Other)	None Detected
ST2-30 *642000944-0030*	Dark Gray Interior Door Frame Caulk	Black Non-Fibrous Homogeneous		100% Non-fibrous (Other)	None Detected
ST2-31 *642000944-0031*	Built-up Roof	Black Non-Fibrous Homogeneous		100% Non-fibrous (Other)	None Detected
ST2-32 *642000944-0032*	Black Covering on Interior Parapet Wall	Black Non-Fibrous Homogeneous	5% Cellulose	95% Non-fibrous (Other)	None Detected
ST2-33 *642000944-0033*	Black Sealant on Interior Parapet Wall	Black Fibrous Homogeneous	20% Cellulose	65% Non-fibrous (Other)	15% Chrysotile
CH-34 *642000944-0034*	Front Entrance - Brown Exterior Door Frame Caulk	Gray Non-Fibrous Homogeneous		100% Non-fibrous (Other)	None Detected
CH-35 *642000944-0035*	Brown Interior Door Frame Caulk	Black Non-Fibrous Homogeneous		100% Non-fibrous (Other)	None Detected

Initial report from: 06/17/2020 16:12:50

EMSL Analytical, Inc.
440 Washington Street, Suite 2 Weymouth, MA 02188
Tel/Fax: (781) 682-2206 / (781) 682-2207
http://www.EMSL.com / WeymouthLab@emsl.com

EMSL Order: 642000944
Customer ID: BETA25
Customer PO: 6050
Project ID:

Test Report: Asbestos Analysis of Bulk Materials via EPA 600/R-93/116 Method using Polarized Light Microscopy

			Non-Asbestos		Asbestos
Sample	**Description**	**Appearance**	**% Fibrous**	**% Non-Fibrous**	**% Type**
Ch-36 *642000944-0036*	Rear Entrance - Brown Exterior Door Frame Caulk	Black Non-Fibrous Homogeneous		100% Non-fibrous (Other)	None Detected
CH-37 *642000944-0037*	Built-up Roof	Black Fibrous Heterogeneous		92% Non-fibrous (Other)	8% Chrysotile
CH-38 *642000944-0038*	Black Tar/Paper Along Interior or Parapet	Black Fibrous Homogeneous	20% Cellulose	65% Non-fibrous (Other)	15% Chrysotile
CH-39 *642000944-0039*	Gray Caulk at Chimney and Edge Flashing	Black Non-Fibrous Homogeneous		100% Non-fibrous (Other)	None Detected
BB-40 *642000944-0040*	Brown Exterior Door Frame Caulk	Black Non-Fibrous Homogeneous		100% Non-fibrous (Other)	None Detected
BB-41 *642000944-0041*	Gray Exterior Door Frame Caulk	Gray Non-Fibrous Homogeneous		100% Non-fibrous (Other)	None Detected
AB-43-Floor Tile *642000944-0042*	Conference Room - Beige 12"x12" VFT & Mastic	Gray Non-Fibrous Homogeneous		100% Non-fibrous (Other)	None Detected
AB-43-Mastic *642000944-0042A*	Conference Room - Beige 12"x12" VFT & Mastic	Black Non-Fibrous Homogeneous		95% Non-fibrous (Other)	5% Chrysotile
AB-44-Floor Tile *642000944-0043*	Main Lobby - Tan 12"x12" VFT & Mastic	White Non-Fibrous Homogeneous		100% Non-fibrous (Other)	None Detected
AB-44-Mastic *642000944-0043A*	Main Lobby - Tan 12"x12" VFT & Mastic	Black Non-Fibrous Homogeneous		92% Non-fibrous (Other)	8% Chrysotile
AB-45-Brown Cove Base *642000944-0044*	Conference Room - Black Cove Base & Brown Mastic	Brown Non-Fibrous Homogeneous		100% Non-fibrous (Other)	None Detected
AB-45-Brown Mastic *642000944-0044A*	Conference Room - Black Cove Base & Brown Mastic	Brown Non-Fibrous Homogeneous		100% Non-fibrous (Other)	None Detected
AB-46 *642000944-0045*	Exit Door - Brown Interior Door Frame Caulk	Gray Non-Fibrous Homogeneous		100% Non-fibrous (Other)	None Detected
AB-47 *642000944-0046*	Bathroom Hallway - Air Duct Tape	Tan Fibrous Homogeneous	85% Cellulose	15% Non-fibrous (Other)	None Detected
AB-48 *642000944-0047*	Bathroom Hallway - 4'x2' Acoustic Ceiling Tile	Brown Fibrous Homogeneous	85% Cellulose	15% Non-fibrous (Other)	None Detected
AB-49 *642000944-0048*	Main Lobby - Brown Interior Window Frame Caulk	Black Non-Fibrous Homogeneous		100% Non-fibrous (Other)	None Detected
AB-50 *642000944-0049*	Main Lobby - Brown Interior Window Glazing	Black Non-Fibrous Homogeneous		95% Non-fibrous (Other)	5% Chrysotile
AB-51 *642000944-0050*	Main Lobby - Brown Interior Wall Joint Caulk	Gray Non-Fibrous Homogeneous		100% Non-fibrous (Other)	None Detected

Initial report from: 06/17/2020 16:12:50

EMSL Analytical, Inc.
440 Washington Street, Suite 2 Weymouth, MA 02188
Tel/Fax: (781) 682-2206 / (781) 682-2207
http://www.EMSL.com / WeymouthLab@emsl.com

EMSL Order: 642000944
Customer ID: BETA25
Customer PO: 6050
Project ID:

Test Report: Asbestos Analysis of Bulk Materials via EPA 600/R-93/116 Method using Polarized Light Microscopy

			Non-Asbestos		Asbestos
Sample	**Description**	**Appearance**	**% Fibrous**	**% Non-Fibrous**	**% Type**
AB-52 *642000944-0051*	P.M. Office - Brown Vinyl Flooring & Clear Adhesive	Black Non-Fibrous Homogeneous		100% Non-fibrous (Other)	None Detected
AB-53 *642000944-0052*	Office Near Lobby - Pink 12"x12" VFT & Mastic	Tan Non-Fibrous Homogeneous		97% Non-fibrous (Other)	3% Chrysotile
AB-54-Floor Tile *642000944-0053*	Lab Room - Pink 12"x12" VFT & Black Mastic	Tan Non-Fibrous Homogeneous		97% Non-fibrous (Other)	3% Chrysotile
AB-54-Mastic *642000944-0053A*	Lab Room - Pink 12"x12" VFT & Black Mastic	Black Non-Fibrous Homogeneous		92% Non-fibrous (Other)	8% Chrysotile
AB-55-Black Cove Base *642000944-0054*	Lab Room - Black Cove Base & Brown Mastic	Black Non-Fibrous Homogeneous		100% Non-fibrous (Other)	None Detected
AB-55-Brown Mastic *642000944-0054A*	Lab Room - Black Cove Base & Brown Mastic	Brown Non-Fibrous Homogeneous		100% Non-fibrous (Other)	None Detected
AB-57-Floor Tile *642000944-0055*	Chemical Lab - Blue/Gray 12"x12" VFT & Mastic	Gray Non-Fibrous Homogeneous		97% Non-fibrous (Other)	3% Chrysotile
AB-57-Mastic *642000944-0055A*	Chemical Lab - Blue/Gray 12"x12" VFT & Mastic	Black Non-Fibrous Homogeneous		92% Non-fibrous (Other)	8% Chrysotile
AB-58-Floor Tile *642000944-0056*	Hallway - Brown Pattern 12"x12" VFT & Mastic	Tan Non-Fibrous Homogeneous		97% Non-fibrous (Other)	3% Chrysotile
AB-58-Mastic *642000944-0056A*	Hallway - Brown Pattern 12"x12" VFT & Mastic	Black Non-Fibrous Homogeneous		100% Non-fibrous (Other)	None Detected
AB-59-Floor Tile *642000944-0057*	Break Room - Tan 12"x12" VFT & Black Mastic	Gray Non-Fibrous Homogeneous		97% Non-fibrous (Other)	3% Chrysotile
AB-59-Mastic *642000944-0057A*	Break Room - Tan 12"x12" VFT & Black Mastic	Black Non-Fibrous Homogeneous		95% Non-fibrous (Other)	5% Chrysotile
AB-61 *642000944-0058*	Main Restroom - Brown Caulk Under Windows	Brown Non-Fibrous Homogeneous		100% Non-fibrous (Other)	None Detected
AB-63 *642000944-0059*	HVAC Machine Room - Air handler Duct Tape	Brown Non-Fibrous Homogeneous		100% Non-fibrous (Other)	None Detected
AB-64 *642000944-0060*	Hallway - 4'x2' Acoustic Ceiling Tile	Gray Fibrous Homogeneous	35% Cellulose 35% Glass	30% Non-fibrous (Other)	None Detected
AB-65 *642000944-0061*	HVAC Machine Room - Gray Pipe Elbow	Gray Fibrous Homogeneous	40% Glass	60% Non-fibrous (Other)	None Detected
AB-66 *642000944-0062*	Side Door - Dark Gray Exterior Door Frame Caulk	Black Non-Fibrous Homogeneous		100% Non-fibrous (Other)	None Detected
AB-67 *642000944-0063*	Gray Panel Inside Chemical Lab Cabinet	Gray Fibrous Homogeneous		75% Non-fibrous (Other)	25% Chrysotile
AB-68 *642000944-0064*	Green Plant Water Pipes - Pipe Insulation & Wrap	Yellow Fibrous Homogeneous	85% Glass	15% Non-fibrous (Other)	None Detected

Initial report from: 06/17/2020 16:12:50

EMSL Analytical, Inc.
440 Washington Street, Suite 2 Weymouth, MA 02188
Tel/Fax: (781) 682-2206 / (781) 682-2207
http://www.EMSL.com / WeymouthLab@emsl.com

EMSL Order: 642000944
Customer ID: BETA25
Customer PO: 6050
Project ID:

Test Report: Asbestos Analysis of Bulk Materials via EPA 600/R-93/116 Method using Polarized Light Microscopy

			Non-Asbestos		Asbestos
Sample	**Description**	**Appearance**	**% Fibrous**	**% Non-Fibrous**	**% Type**
AB-69 *642000944-0065*	Dark Blue Water Service - Pipe Insulation & Wrap	Gray Fibrous Homogeneous		60% Non-fibrous (Other)	20% Amosite 20% Chrysotile
AB-70 *642000944-0066*	Green Plant Water Pipes - Pipe Insulation & Wrap	Gray Fibrous Homogeneous	50% Cellulose	30% Non-fibrous (Other)	20% Chrysotile
AB-71 *642000944-0067*	Light Blue Potable Water - Pipe Insulation & Wrap	Gray Fibrous Homogeneous	40% Cellulose	30% Non-fibrous (Other)	30% Chrysotile
AB-72 *642000944-0068*	Silver Steam Pipes - Pipe Insulation & Wrap	White Fibrous Homogeneous		60% Non-fibrous (Other)	25% Amosite 15% Chrysotile
AB-73 *642000944-0069*	Silver Steam Pipes - Pipe Insulation & Wrap	White Fibrous Homogeneous		65% Non-fibrous (Other)	15% Amosite 20% Chrysotile
SH-74 *642000944-0070*	Door F5 - Brown Exterior Door Frame Caulk	Black Non-Fibrous Homogeneous		100% Non-fibrous (Other)	None Detected

Analyst(s)
Christine Cleveland (78)

Christine Cleveland

Christine Cleveland, Laboratory Manager
or Other Approved Signatory

Initial report from: 06/17/2020 16:12:50

Section 02080
MANAGEMENT OF CONTAMINATED MATERIALS
Revised

SECTION 02080

MANAGEMENT OF CONTAMINATED MATERIALS

PART 1 GENERAL

1.01 SUMMARY

A. Section Includes
1. Requirements for disposal of surplus materials generated from excavation during construction at the Taunton Wastewater Treatment Facility.
2. Requirements for identifying, handling, stockpiling, and disposal of contaminated soil.

B. Related Sections
1. Section 01025 – Measurement and Payment
2. Section 01300 – Submittals
3. Section 02140 – Dewatering

1.02 WORK INCLUDED AND DEFINITIONS

A. In general, Work under this Section shall include all labor, materials, equipment, supervision and supplies necessary for the loading, handling, transportation, and off-site disposal of Impacted and Contaminated soil as directed by the ENGINEER.

1. "Natural" soils are those believed by the ENGINEER (but not yet confirmed by laboratory testing) to contain concentrations of oil or hazardous materials below the levels listed in "Table 1: MADEP Identified Background Levels in Soil". The designation of "Natural" soil will be made by the ENGINEER based on field screening, visual observation, and/or olfactory indicators.

2. "Impacted" soil shall be defined as those containing concentrations of contaminants above MassDEP's level for "Natural" soils but still meet the acceptance criteria for a beneficial use facilities' acceptance criterion based on the ENGINEER's laboratory analytical results.

3. "Contaminated" soil shall be defined as those containing concentrations of contaminants above those for a beneficial use facilities' acceptance criterion but below COMM97 acceptance criterion based on the ENGINEER's laboratory analytical results.

B. Soil generated from excavation activities, shall be managed as follows:

1. Securing all permits and licenses, as necessary, including notification of local emergency personnel and notification/reporting requirements, with respect to unforeseen conditions;
2. Mobilization and demobilization of all personnel, equipment, materials and supplies required to perform the Work;

3. Assisting ENGINEER in obtaining environmental samples;
4. Upon determination by the ENGINEER (based on laboratory sample results) that the soil qualifies as Impacted soil, or Contaminated soil, the CONTRACTOR shall coordinate off-site disposal of the soil at an appropriate disposal facility. As stipulated in Section 01025, the CONTRACTOR is responsible for the disposal of excess soil "Natural" as defined above at no additional cost to the OWNER;
5. Segregating boulders and other large rocks for off-site management, as directed by the ENGINEER;
6. To the extent practical, removing and segregating asphalt from the soil; and,
7. General site cleanup.

1.03 SAMPLING

A. The Contractor will provide all equipment, manpower, and machinery required to conduct test pits for collection of representative soil samples. The Contractor will backfill and restore each test pit to match existing grades.

B. The ENGINEER will be responsible for sampling and analyses as may be required by the receiving disposal facility(ies) for off-site disposal of Contaminated soil. Any such sampling services shall be identified by Contractor as quickly as possible, and Engineer will respond as expeditiously as possible. Contractor shall schedule his/her activities to allow for sampling to be performed, analytical results to be compiled and management decisions to be made. No claim shall be made for reasonable delays associated with such supplemental sampling, analytical services and decision making. In most cases, Engineer will provide any necessary sampling services and analytical results within fourteen (14) days after formal request by Contractor. To accommodate a time critical project activity, and upon Contractor's request, Engineer will accelerate the supplemental sampling and analytical results to the extent reasonably possible.

C. Any samples collected and/or tested by the CONTRACTOR shall be for his own convenience only, and shall not be the basis for classification, determination of limits, or payment.

1.04 LICENSED SITE PROFESSIONAL (LSP) SERVICES

A. All Licensed Site Professional (LSP) services for the work shall be provided by the ENGINEER, including all Massachusetts Department of Environmental Protection (MassDEP) response actions. The ENGINEER will be responsible for preparing all Massachusetts Contingency Plan (MCP) related filings including but not limited to Utility-related Abatement Measure (URAM) Plans, Release Abatement Measure (RAM) plans, Material Shipping Records, and Bills of Lading.

1.05 APPLICABLE LAWS AND REGULATIONS

A. The CONTRACTOR is advised that Work under this Section may need to be performed under the requirements of 310 CMR 40.0000 et seq., also known as the Massachusetts Contingency Plan (MCP).

B. Work under this Section shall be performed in strict compliance with all applicable Federal, State and local laws, rules, regulations related to the handling and off-site management of contaminated wastes and regulated soil.

C. Pertinent Federal and State Authorities having jurisdiction over this project include:

1. Occupational Safety and Health Administration (OSHA)
2. U.S. Environmental Protection Agency (EPA)
3. Massachusetts Department of Environmental Protection (MassDEP)

D. The following OSHA regulations will apply:

1. Occupational Safety and Health Standards, Hazardous Waste Operations and Emergency Response - 29 CFR 1910.120.
2. Safety and Health Regulations for Construction - 29 CFR 1926.

1.06 SUBMITTALS

A. Submittals shall be made in compliance with the requirements of Section 01300 except as provided for herein.

B. No Work will be permitted to proceed until the required submittals have been received and approved by the ENGINEER. In the event the ENGINEER requests additional information, it shall be the CONTRACTOR's responsibility to provide such additional information in a complete and timely manner, so that construction can proceed by the date stipulated in the Notice to Proceed.

C. Impacted and/or Contaminated soil may be encountered during the work. Prior to the commencement of work, the CONTRACTOR shall submit the following to the ENGINEER for approval:

1. Submittal of all required certifications demonstrating that personnel are properly trained and qualified to perform the Work in accordance with applicable OSHA regulations and all laws governing the Work.
2. Names and qualifications of all proposed subcontractors, if any, identifying the tasks to be performed by each proposed Subcontractor.
3. If Impacted or Contaminated Soil is encountered, the CONTRACTOR shall prepare a Soil Management Plan that includes a description of the proposed equipment and decontamination procedures, identification of any staging areas for the loading of the Impacted/Contaminated soil (as directed by the Engineer), proposed disposal facility(ies), and project schedule.

D. The CONTRACTOR's Site-Specific Health & Safety Plan pursuant to OSHA 1910.120 requirements.

E. Approval of submittals by the ENGINEER shall not impose any liability upon the ENGINEER, nor shall any such approval relieve the CONTRACTOR of his/her

responsibilities to meet all of the requirements and comply with all applicable laws, regulations and other applicable requirements under this Contract.

1.07 EXISTING ENVIRONMENTAL CONDITIONS

A. The CONTRACTOR shall satisfy himself/herself as to the conditions existing at the Site, the type of equipment required to perform this Work, and the quality and quantity of the materials to be removed.

B. Failure of the CONTRACTOR to become fully acquainted with the available information will not relieve him/her of the responsibility to completely and properly perform the work in full compliance with the Contract Documents. The ENGINEER assumes no responsibility for any conclusion or interpretation made by the CONTRACTOR on the basis of information made available by the Owner or ENGINEER.

PART 2 PRODUCTS [NOT USED]

PART 3 EXECUTION

3.01 GENERAL

A. The CONTRACTOR will provide adequate barriers and demarcation of excavations and exclusion zones to warn site visitors and the public of potential hazards.

B. The CONTRACTOR will take appropriate means to prevent a release or the spread of hazardous wastes or contaminated materials as a result of the CONTRACTOR's operations.

C. The CONTRACTOR will assist the ENGINEER with collection of soil and/or groundwater samples for laboratory analyses, as requested.

D. The ENGINEER will be responsible for collection of all samples, and the determination of the limits of contamination

3.02 SITE HEALTH & SAFETY

A. The CONTRACTOR is solely responsible for controlling Site health and safety, including the provision of a Site Health and Safety Officer. In the performance of its Work, the CONTRACTOR shall provide for the safety of all CONTRACTOR personnel, other CONTRACTOR's personnel, regulatory agency personnel, and the public for the duration of the Contract.

B. The CONTRACTOR is solely responsible for his/her construction means and methods.

C. The ENGINEER will be responsible for the health and safety of its personnel only.

D. The CONTRACTOR shall provide a Health and Safety Plan (HASP) which addresses identified contaminants of concern for the Work under this Contract. Such plan shall

conform to the requirements of OSHA 1910.120 and all other applicable federal, state, and local laws, regulations, ordinances, and procedures. The HASP shall be developed and implemented by the CONTRACTOR's Safety Officer experienced with the health and safety requirements of OSHA 1910.120. The HASP shall be revised, as needed, whenever new information about site hazards is obtained.

E. All personnel performing Work in contaminated or hazardous areas shall be fully trained in accordance with the OSHA 1910.120 and the HASP and shall be thoroughly briefed on anticipated hazards, safety equipment to be employed, safety practices to be followed, and emergency procedures and communications. The CONTRACTOR shall have a medical monitoring surveillance program in place for all personnel in accordance with all applicable laws and regulations.

3.03 MISCELLANEOUS PROVISIONS

A. CONTRACTOR must have a valid EPA identification number and any other permits or licenses required by federal, state, and local laws, regulations, ordinances, and procedures for the transportation of hazardous wastes.

B. The CONTRACTOR shall be responsible for securing all necessary and applicable permits, certificates, licenses, and approvals required for the performance of this Work and shall be responsible for the payment of all associated fees.

C. The CONTRACTOR shall comply with all required reporting and record keeping requirements in accordance with the provisions of this Contract and all applicable federal, state, and local laws, regulations, ordinances, and procedures.

D. The CONTRACTOR shall be responsible for all notifications required by federal, state, and local laws, regulations, ordinances, and procedures. All notifications shall be coordinated with the ENGINEER.

E. Material Shipping Records and/or Bills of Lading, as appropriate, will be provided and coordinated by the ENGINEER. The Owner will be responsible for signing all waste manifests and bills of lading. In order for CONTRACTOR's operations to proceed without interruption, complete and accurate information shall be provided by the CONTRACTOR during the Submittals process. CONTRACTOR shall be responsible for preparing applications to disposal facilities.

3.04 DUST MONITORING & CONTROL MEASURES

A. The CONTRACTOR is responsible for monitoring the Work for evidence of airborne particulates (dusts) emanating from the Work area. It shall be the CONTRACTOR's responsibility to continuously monitor the work area for dust levels.

B. The CONTRACTOR shall take appropriate measures to substantially eliminate the generation of dusts within the Work Area, including use of water provided by the CONTRACTOR and covering <u>all</u> stockpiled wastes and/or soil, except in the immediate vicinity of the excavation, where water may be required to control dust emissions.

C. The ENGINEER will also be monitoring the site for elevated levels of dusts. In the event that visible emissions are observed, the ENGINEER may direct the contractor to take appropriate measures to mitigate the condition. Failure of the CONTRACTOR to implement measures that reduce dust levels may be cause for suspension of the Work, until otherwise directed by the ENGINEER.

3.05 EXCAVATON OF SOIL

A. Soil will be classified based on soil sampling results from test pits or observation wells performed by the Contractor. Classified soil can be live loaded for removal from the site.

B. Soil identified as "Natural" that is generated from excavation activities associated with the Taunton WWTF will become property of the Contractor. As stipulated in Section 01025, the CONTRACTOR is responsible for the disposal of excess "Natural" soil as defined above at no additional cost to the OWNER.

C. Soil identified as "Impacted" that is generated from excavation activities associated with the Taunton WWTF will be transported off site to an facility approved by the Engineer. A Material Shipping Record is required for shipment of all "Impacted" soil.

D. Soil identified as "Contaminated" that is generated from excavation activities associated with the Taunton WWTF will be transported off site to an facility approved by the Engineer. A Material Shipping Record or Bill of Lading is required for shipment of all "Contaminated" soil.

E. The CONTRACTOR shall minimize the spread and loss of "Impacted" or Contaminated Soil during excavation activities as follows:

1. The CONTRACTOR shall segregate boulders, asphalt, construction debris and other deleterious materials from excavated Soil to the extent practicable and as directed by the ENGINEER. This segregation shall occur at the point of excavation, prior to the transport of soil.

3.06 TEMPORARY SOIL STOCKPILING

A. The ENGINEER anticipates the need for temporary stockpiling of soil. However, the work areas do not allow for stockpiling at the site of generation of the soil. Therefore, soil shall be transported to and stockpiled at the Owner's property at 600 West Water Street in Taunton, Massachusetts (or another site designated by the Owner). The following provisions shall apply to the stockpiling:

1. Due to space limitations at 600 West Water Street a maximum of 500 cubic yards total of soil can be stored at one time.
2. Natural soil, soil that is not pre-characterized, Impacted soil, and Contaminated soil stockpiles shall be maintained separately and delineated with jersey barriers.
3. Straw wattles shall be provided on the downgradient side of all stockpiles.

4. As directed by the ENGINEER, Impacted soil and Contaminated soil shall be stockpiled out of the immediate work area and in a location designated by Owner (at 600 West Water Street), on 6-mil polyethylene sheeting. All stockpiled Impacted soil and Contaminated soil shall be covered with 6-mil polyethylene sheeting at the end of every working day. Sheeting shall be properly secured such that it remains fully intact during inclement weather conditions.
5. As directed by the ENGINEER, soil that is not pre-characterized shall be stockpiled out of the immediate work area and in a location designated by Owner (at 600 West Water Street), on 6-mil polyethylene sheeting. All stockpiled soil that is not pre-characterized shall be covered with 6-mil polyethylene sheeting at the end of every working day. Sheeting shall be properly secured such that it remains fully intact during inclement weather conditions.
6. As directed by the ENGINEER, the CONTRACTOR shall segregate the soil into separate stockpile areas (physically separated by excavation site and labeled) to facilitate separate characterization by ENGINEER, and subsequent off-site management. No individual stockpile may exceed 250 cubic yards.
7. All stockpiled soil shall be transported from 600 West Water Street as soon as possible. In no case shall excavated soil remain stockpiled for more than 120 days from its excavation.

3.07 OFF-SITE MANAGEMENT OF IMPACTED SOIL

A. The CONTRACTOR shall be responsible for the off-site transportation and disposal of Impacted soil.

B. The CONTRACTOR shall be responsible for coordination of all transporter and receiving facility activities. Transporter vehicles used for the transportation of Impacted soil shall be covered, substance compatible, licensed, insured, and permitted pursuant to federal, state, and local laws, regulations, ordinances, and procedures.

C. Vehicles departing the site shall be properly logged to show the vehicle identification, driver's name, time of departure, destination, and approximate volume and content of material carried.

D. Impacted soil shall not leave the site until the designated receiving facility has agreed in writing to accept the type and quantity of waste/soil to be shipped.

E. The CONTRACTOR shall complete required facility applications and other pertinent forms for proper transportation and disposal. The ENGINEER shall review and the City will sign the applications. Signatures from the receiving location of materials transported off-site are required. The CONTRACTOR shall be held accountable for ensuring that requirements of the transporter and receiving disposal facility(ies) and federal, state, and local laws, regulations, ordinances, and procedures are complied with and properly documented.

F. Documentation shall be maintained indicating that applicable laws have been satisfied and that Impacted and Contaminated soil has been successfully transported and received at the disposal facility(ies).

G. Actual quantities and measurements in the field shall be tabulated by the CONTRACTOR on a daily basis. The CONTRACTOR will not be reimbursed for unit rate work performed without the prior approval.

3.08 OFF-SITE MANAGEMENT OF CONTAMINATED SOIL

A. The CONTRACTOR shall be responsible for the off-site transportation and disposal of Contaminated soil designated by the ENGINEER for off-site disposal at an appropriate disposal facility.

B. The Contractor will be responsible for additional sampling and analyses as may be required by the receiving disposal facility(ies) for off-site disposal of Contaminated soil.

C. Vehicles used for transportation of Contaminated soil shall be properly labeled and placarded, as required for off-site transportation for conformance with federal, state, and local laws, regulations, ordinances, and procedures.

D. The CONTRACTOR shall be responsible for coordination of all transporter and receiving facility activities. Transporter vehicles used for the transportation of Contaminated soil shall be covered, substance compatible, licensed, insured, and permitted pursuant to federal, state, and local laws, regulations, ordinances, and procedures.

E. Vehicles departing the site shall be properly logged to show the vehicle identification, driver's name, time of departure, destination, and approximate volume and content of material carried.

F. No Contaminated soil shall leave the site until the designated receiving facility has agreed in writing to accept the type and quantity of waste/soil to be shipped.

G. The CONTRACTOR shall complete required facility applications and other pertinent forms for proper transportation and disposal. The ENGINEER shall review and the City will sign the applications. Signatures from the receiving location of materials transported off-site are required. The CONTRACTOR shall be held accountable for ensuring that requirements of the transporter and receiving disposal facility(ies) and federal, state, and local laws, regulations, ordinances, and procedures are complied with and properly documented.

H. Documentation shall be maintained indicating that applicable laws have been satisfied and that Contaminated soil has been successfully transported and received at the disposal facility(ies).

I. Actual quantities and measurements in the field shall be tabulated by the CONTRACTOR and verified by ENGINEER on a daily basis. The CONTRACTOR will not be reimbursed for unit rate work performed without the prior approval of quantities by ENGINEER.

3.09 SITE CLEANUP

A. During the course of the Work, the CONTRACTOR shall keep the Site and his operations clean and neat at all times. The CONTRACTOR shall dispose of all residue resulting from the site operations; and at the conclusion for the day's Work, he shall remove and haul away surplus materials, lumber, equipment, temporary structures, and any other refuse remaining from the site operations and shall leave the site in a neat and orderly condition.

3.10 DOCUMENTATION

A. Within 21 days after substantial completion of the Work, the CONTRACTOR shall submit to the ENGINEER one (1) original copy of all manifests, certified weigh slips (tons), bills-of-lading, and records of final waste disposition from the accepting disposal facility(ies), and all other pertinent documentation, including a summary of dates and quantities relating to the off-site management of Contaminated soil.

END OF SECTION

Section 11320
PRIMARY CLARIFIER EQUIPMENT

Revised

SECTION 11320

PRIMARY CLARIFIER EQUIPMENT

PART 1 GENERAL

1.01 DESCRIPTION

A. Furnish, Install and Test four (4) primary clarifier mechanisms for installation in existing and proposed concrete basins as shown on the contract drawings. Each basin shall be 55 feet in diameter with a side water depth of 9 feet, a freeboard of a minimum 18 inches and a floor slope of 1 inch to 12 inches.

B. Each mechanism shall be supported on the walkway spanning the tank with the flow entering the bottom of the tank through a central stationary steel influent column and flowing into the feedwell. Effluent will be collected in a peripheral launder and a center drive mechanism shall be provided for rotation of the two rake arms with rake blades.

C. The equipment shall be designed to effectively settle sludge solids and scrape the settled solids from the basin floor to the central sludge withdrawal sump as shown on the drawings. Floating solids shall be collected by the skimmer mechanism and removed through a scum trough at the tank periphery, while clarified effluent is collected uniformly by the peripheral launder.

D. The equipment furnished for each primary clarifier mechanism shall include but not be limited to: walkway, center drive assembly, center drive platform, feedwell, center support shaft, sludge collection arms with rake blades, effluent weir plates, scum baffle, anchor bolts and assembly fasteners, and control panels.

E. Except where specifically indicated otherwise, all plate, and structural members designated for submerged service shall have a minimum thickness of 1/4 inch. All structural steel will conform to ASTM A-36 requirements and steel plate will conform to ASTM A283C requirements. All anchor bolts and fasteners shall be type 316 stainless steel.

1.02 RELATED SECTIONS

A. SECTION 01300 – SUBMITTALS

B. SECTION 01665 – SERVICES OF MANUFACTURER'S REPRESENTATIVE

C. SECTION 01680 – EQUIPMENT AND SYSTEM CHECKOUT, CERTIFICATION, AND TESTING

D. SECTION 01730 – OPERATION AND MAINTENANCE MANUALS

E. SECTION 05500 – METAL FABRICATIONS

F. SECTION 09900 – PAINTING

G. SECTION 13321 – INSTRUMENTATION AND CONTROL SYSTEM

H. DIVISION 16 – ELECTRICAL

1.03 REFERENCES

A.	ASTM A-36	American Society of Testing Materials Structural Steel Specifications
B.	ASTM A-325	American Society of Testing Materials Fastener Specifications
C.	ASTM 304	American Society of Testing Materials Bolt Specifications
D.	ASTM A-48	American Society of Testing Materials Cast Iron Specifications
E.	ASTM A-536	American Society of Testing Materials Cast Iron Specifications
F.	AISI 4142	American Iron and Steel Institute Heat Treated Steel Specifications
G.	AGMA	American Gear Manufacturers' Association Gear Ratings
H.	AWS	American Welding Society - Current Standards
I.	AFBMA	Anti-friction Bearing Manufacturers' Association – Bearing Life Specifications
J.	ASTM A283C	American Society of Testing Materials Steel Plate Specifications
K.	NEMA	National Electrical Manufacturer's Association - Motor Design Standards and Standards for Control Enclosures

1.04 SUBMITTALS

A. Shop Drawings in accordance with specification Section 01300.

B. Two copies of all materials required to establish compliance with these specifications shall be submitted for review. Submittals shall include at least the following:

1. Certified general arrangement drawings showing all important details and materials of construction, dimensions, loads on supporting structures, and anchor bolt locations.
2. Descriptive literature, bulletins, and/or catalogs of the equipment.
3. Complete data on motors and speed reducers.
4. Wiring diagrams and electrical schematics for all control equipment to be furnished.
5. Calculations documenting the AGMA rating of the drive unit and life of the main bearing, prepared and signed by a registered professional engineer.
6. Complete descriptive information and electrical schematic for the torque overload device.

7. Complete sludge transport calculations substantiating the rake blade design, rake tip speed, and floor slope.
8. Complete process calculations substantiating the sizing of the center column and ports, EDI and outlets, and outer feedwell. These calculations shall be based on parameters from the manufacturers operating experience. These parameters shall be verified by data presented from successful operating installations. Side by side comparison testing of EDI and feedwell design from existing operating clarifiers that have spiral rake blades and are products of the manufacturer shall be presented with the calculations.

C. The submittal shall include data from a minimum of five (5) successfully operating installations that verify the experience of the manufacturer. Data shall include performance verification of influent flow rate (Q), hydraulic loading (OFR), and effluent suspended solids (ESS). Operation and Maintenance Manual in accordance with specification Section 01730.

1.05 MARKING, DELIVERY, STORAGE, AND HANDLING

A. Fabricated assemblies shall be shipped in the largest sections permitted by carrier regulations, properly match-marked for ease of field erection.

B. All components shall be erected immediately upon receipt from the primary clarifier equipment manufacturer or stored in strict conformance with storage recommendations provided by the equipment manufacturer in the operations and maintenance manual.

C. The mechanism shall be lubricated in strict accordance with the instructions of the primary clarifier mechanism manufacturer's field service representative. The contractor shall provide the required lubricants.

1.06 QUALITY ASSURANCE.

A. The primary clarifier equipment manufacturer shall modify his standard equipment to meet the minimum values specified for dimensions, design, and the intent of this specification.

B. Manufacturers regularly engaged in the manufacture of the clarifier equipment as specified herein and who can demonstrate equipment of this specified design, in actual service for a period of not less than 10 years will be considered as acceptable manufacturers.

C. Manufacturers shall show evidence of quality assurance in manufacturing and supplying equipment essential in details to the equipment herein specified. This assurance will be met by certification to the quality system requirement of ISO 9001 or equivalent standard as accepted by the engineer.

D. The equipment specified herein shall be factory assembled as far as practical to verify that all mating parts can be field assembled. The manufacturer shall submit certification of shop trial assembly and photographs of assembly before shipment.

E. Shop inspection shall be performed by a qualified inspector and certified by the manufacturer. The inspection shall be documented and all deficiencies noted, corrected, re-inspected and final completion formally authorized. Final shipment authorization shall be by the manufacturer to ensure completion of all fabrication, assembly, and inspection requirements. Inspection records and evidence of inspector qualification shall be submitted to the owner upon request.

1.06 OPERATION AND MAINTENANCE MANUALS

A. The equipment manufacturer shall furnish an electronic copy and printed copies of the operation and maintenance manual at least two weeks prior to shipment of all major equipment components, which will be retained at the installation site to assist plant operators.

B. Each manual shall be a bound, indexed binder with drawings and parts lists prepared specifically for this project rather than general instructions that are not designed for this project.

C. As a minimum, the manual shall contain:

1. Certified as built drawings - General arrangement
2. Certified as built drawings - General arrangement details
3. Erection drawings.
4. A complete bill of materials for the equipment including the weights of all structural steel components.
5. Installation and maintenance instructions for the specific equipment including the erection sequence, maintenance and trouble-shooting check points, and complete lubrication procedures with recommended grades of lubricants.
6. Cut sheets for all equipment items purchased from sub-vendors.
7. A list of the primary clarifier equipment manufacturer's recommended spare parts specifically denoting wear items, long delivery items, and all items convenient for stocking as optional replacement items.

PART 2 PRODUCTS

2.01 MANUFACTURERS

A. Amwell, A Division of McNish Corp., Aurora, IL

B. WesTech Engineering Inc., Salt Lake City, UT

C. Approved equal.

2.02 DESIGN

A. The Primary Clarifier Mechanism shall be designed as follows:

Influent Flow Rate Per Clarifier (MGD)	
– Design:	2.6 MGD
– Maximum:	6.3 MGD
– Solids Loading Design:	4,500 lbs/day
– Solids Loading Maximum:	5,500 lbs/day
Tank Dimensions (ft):	55x55
Side Water Depth (ft):	9’-1”
Freeboard (ft):	1.5 (min.)
Bottom Slope (in/ft):	1/1
Center Support Outside Diameter (in):	24
Feedwell	
– Diameter (ft):	8
– Depth (ft):	3
Collector Tip Speed (ft/min):	10
Motor HP:	1
Torque (ft-lbs)	
– Design Running:	14,700
– Momentary Peak:	29,400

2.03 MATERIALS

A. All structural steel shall conform to AISC – Steel Construction Manual latest edition. All steel plates shall conform to ASTM A36. All structural steel shape series of M, MT, S, ST, C, MC, L shall conform to ASTM A36. Structural steel shapes W, WT, HP shall conform to ASTM A992/A572. All pipe shall be ASTM A53, Grade B. All square and rectangular tubing shall be ASTM A500, Grade B, unless otherwise noted. Steel members in contact with liquids, either continuously or intermittently, shall have a minimum thickness of 1/4 inch unless otherwise noted. All aluminum shall be type 5052, 6061, 6063, or 2014 alloy unless noted. All stainless steel shall be type 304/304L unless noted.

2.04 CENTER DRIVE ASSEMBLY

A. Fabricated or Cast Drives will be permitted.

<u>FABRICATED DRIVE</u>

B. Design Parameters

1. The drive unit shall be designed and manufactured by the equipment supplier to ensure unit responsibility. The drive unit shall be designed for the torque values previously listed. It shall turn the mechanism at the design collector tip speed. The drive main bearing shall be designed for the total rotating mechanism loads with a minimum L-10 life of 50 years or 438,000 hours. The drive unit shall be

capable of producing and withstanding the previously listed momentary peak torque while starting. The drive main gear shall be designed to a minimum AGMA 6 rating when rated in accordance with the latest AGMA standard. Gear teeth shall be designed for proper load distribution and sharing. Stub tooth design and surface hardening of the main gear shall not be allowed. The main bearing shall be capable of withstanding the listed overturning moment without the aid of any underwater guides or bearings to ensure correct tooth contact for AGMA rating of the main gear.

a. All spur gearing shall be designed to the latest AGMA spur gear standard for strength and surface durability, based on a life of 175,000 hours. The design running torque rating of the drive gearing shall be based on the smaller of the strength and durability values determined from the above AGMA standard. To ensure safety and ease of maintenance, all components of the drive shall be direct coupled.

b. No overhung pinions shall be allowed on the speed reducing unit. The lower pinion bearing shall not be located below the turntable base.

c. Any and all welding on the drive unit shall be done using E70XX weld rod.

C. Physical Characteristics

1. The drive unit shall consist of a solid internal main spur gear, bearing turntable, pinion, secondary speed reducer, support base, and drive unit bearing. The drive shall be mounted on the center column and support the entire rotating load of the mechanism. The main internal gear shall be forged of alloy hardened steel. The pinion shall be heat treated alloy steel. All speed reducers shall be fully enclosed and running in grease. Support base for the drive shall be of welded steel to assure rigidity. Lubricant and dust shields shall be provided. The drive bearing shall include a forged steel precision gear/bearing set, with fully contoured raceways hardened to a minimum 58-60 Rc and protected by a neoprene seal. Strip liners designed for periodic maintenance and replacement shall not be acceptable. The drive shall be designed so that the balls and nylon spacers can be replaced without removing the access walkway. The main gear to pinion gear mesh shall be oil lubricated. Lubrication fittings shall be readily accessible. Continuous condensate drains shall be provided in the main gear housing.

D. An overload device shall be provided in a stainless steel, weatherproof enclosure. The device shall be actuated by torque generated from the main drive, which shall operate two independently adjustable switches (the alarm switch at 100 percent of design running torque and the motor cutout switch at 120 percent of design running torque). Devices that require the worm to float and measure the thrust of the worm gear shall not be acceptable. These two switches shall be factory adjusted to accurately calibrate the alarm torque value and the overload position. A visual torque indicator shall be provided and oriented so that it may be read from the walkway. It shall be calibrated from 0 to 160 percent of design running torque.

E. The turntable base shall have an annular bearing raceway upon which the rotating assembly rests. It shall have a maximum allowable deflection in accordance with the

bearing specifications. The allowable modulus of elasticity shall be a minimum of 29 x 10^6 psi. The center cage shall be fastened to and supported from the gear casing. Ball bearings shall be of high carbon chrome alloy 52100 steel running in fully contoured races, as part of a precision gear/bearing set. The balls shall be grease lubricated and protected by elastomer seals. Felt seals that allow the entrance of moisture from outside the drive (i.e. rainwater, condensate, etc.) will not be allowed.

F. The speed reducing unit shall consist of cycloidal, helical, or planetary speed reducers directly connected to a motor without the use of chains or v-belts, and shall be keyed to the pinion.

1. The main ring gear of cycloidal drives shall be made of high carbon chromium bearing steel and be fixed to the drive casing. An eccentric bearing on the high speed shaft shall roll cycloidal discs of the same material around the internal circumference of this main ring gear. The lobes of the cycloid disc shall engage successively with pins in the fixed ring gear. The movement of the cycloid discs shall be transmitted then by pins to the low speed shaft. Speed reducer efficiency shall be a minimum of 90% per reduction stage.

2. Speed reducer helical or planetary gearing shall be manufactured to AGMA standards and shall provide at least 95% power transmission efficiency per stage. The speed reducer shall have a minimum service factor of 1.25 based on the output torque rating of the drive.

3. The reducers shall be fitted with radial and thrust bearings of proper size for all mechanism loads and be grease lubricated. As a safety feature, the speed reducer shall be back driveable to release any stored energy as the result of an over torque condition.

CAST DRIVE

A. Gear Design - The continuous output torque rating and the allowable stress values used in the design of the intermediate worm gear reduction unit and the final gear reduction unit shall be in strict conformance with the latest revision of the following standards:

a. Worm & Worm Gearing: ANSI/AGMA 6034-B92, "Practice for Enclosed Cylindrical Worm Gear Speed Reducers and Gearmotors."

b. Spur and Pinion Gearing: ANSI/AGMA 2001-C95, "Fundamental Rating Factors and Calculation Methods for Involute Spur and Helical Gear Teeth."

c. The continuous output torque rating of the spur and pinion gearing shall be based on the smaller of the rating values determined from the above ANSI/AGMA standard and a design life of 20 years. The drive shall be designed and rated to develop the following torque values.

The equipment manufacturer shall submit calculations to the ENGINEER for approval substantiating the continuous output torque rating and design life. Calculations shall include the spur gear, pinion, worm gear set, and all bearings used in the intermediate worm gear reduction unit and the final gear reduction unit.

The spur gear and pinion calculations shall clearly specify the values used for the following design parameters for surface durability and strength ratings:

d. Number of Pinions	Pinion Pitch Diameter
e. Actual Face Width	Tooth Diametrical Pitch
f. Tooth Geometry Factors (I and J Factors)	Hardness Ratio Factor
g. Load Distribution Factor	Elastic Coefficient
h. Aspect Ratio	Life Factor
i. Allowable Contact Stress	Application Factor
j. Allowable Bending Stress	Rim Thickness Factor

Load distribution factors (Cm and Km) used in the calculations shall not exceed 1.28. For parameters which are material dependent, such as allowable contact stress, the calculations shall include a full description of the materials, quality grade, and heat treatment used. Momentary peak torque calculations shall use a maximum of 75% of yield strength.

B. Primary Gear Reduction Unit - The primary gear reduction unit shall consist of a totally enclosed, horizontal type gearmotor or gear reducer with C-face mounted drive motor, mounted on top of the intermediate worm gear housing. The primary gear reducer shall be a heavy-duty parallel shaft helical type, conforming to ANSI/AGMA 6019-B89, and shall have a service factor of 1.4, based upon the specified continuous running torque.

All gearbox bearings shall be of the anti-friction type and running in oil in a cast iron or steel housing. The totally enclosed primary reduction unit shall operate on 3 phase, 60 hertz, 230/460 volt power source, and shall be at least 1.0 HP. The motor shall conform to NEMA specifications for AC motors and be designed for continuous operating in humid outdoor condition.

C. Chain Drive - Power transmission between the primary gear reduction unit and the intermediate worm gear reduction unit shall be through a steel roller chain and steel sprocket assembly. The chain drive shall be enclosed with a steel chain guard meeting OSHA requirements. The shear pin overload shall be easily accessible by removal of the chain guard.

D. Intermediate Worm Gear Reduction Unit - The intermediate worm gear reduction unit shall consist of a worm gear driven by an integral straddle mounted worm and shaft, supported by heavy duty anti-friction bearings running in an oil bath, and housing. Plain or sleeve type bearings will not be acceptable. All bearings shall have a minimum L10 life of 20 years, based on the continuous torque rating.

The integral worm and shaft shall be single piece and made from AISI 8620H alloy steel carburized, hardened and ground and shall have a case hardness of 55-60 RC.

The worm gear shall be centrifugally cast, conforming to ASTM B271 and ANSI/AGMA 2004-B89, high strength, manganese bronze.

The worm gear shall have a minimum 200 Brinell hardness and shall have a minimum pitch diameter of 9.59 inches and have a minimum face width of 1.75 inches. The worm gear shall be keyed to the pinion shaft. The intermediate worm gear housing shall be ASTM A48 Class 40 cast iron complete with seals, oil fill, oil level sight gauge and drain plugs. The intermediate worm gear housing shall have full 360□ contact and support from the final gear housing.

E. Final Gear Reduction Unit - The final gear reduction unit shall consist of a pinion, internal split spur gear, anti-friction ball bearing assembly, and a cast housing.The pinion shall be AISI 4150 minimum grade 2 steel, heat treated to a minimum 321 BHN hardness, have a minimum 4.00 inch pitch diameter.

The pinion shall be single piece, extending from the worm gear to the spur gear, straddle mounted between anti-friction ball or roller bearings to maintain accurate pinion to spur gear alignment and contact. All bearings shall have a minimum L10 life of 20 years based on the continuous torque. Overhung pinions shall not be acceptable. The pinion shall be manufactured to have a minimum AGMA quality class 8, in conformance with ANSI/AGMA 2000-A88.

The internal spur gear shall be ductile iron normalized, quenched & tempered, conforming to grade 120-90-02, with micro-structure of fine tempered pearlite, conforming to ASTM A536, manufactured to have a minimum base hardness of 270 BHN and have a minimum AGMA quality Class 6, in conformance with ANSI/AGMA 2000-A88. The spur gear shall have a minimum 28 inch pitch diameter. The internal spur gear shall be of split construction to provide for replacement of balls and race liners without removing the drive unit or other parts of the clarifier mechanism. Internal spur gears lacking split construction will not be acceptable.

The internal spur gear shall be mounted on a large, full compliment anti-friction ball bearing assembly designed to support the entire rotating clarifier mechanism.

The ball bearing assembly shall consist of a minimum 79, 1-1/4" diameter AISI E52100 GRADE 50 chrome alloy steel bearing balls (60-64 RC) running in an oil bath protected from contamination by a dust shield. Nylon spacer balls will not be acceptable. The balls shall bear both horizontally and vertically on four (4)renewable hardened alloy steel race liners inserted into the housing and the internal spur gear. The minimum ball race diameter shall be 31 inches, to assure stability. The race liner inserts shall be heat treated to a hardness of no greater than 39-43 RC to avoid fatigue cracking. The race liners and bearing balls shall bedesigned for a minimum L10 life of 20 years. Bearing life calculations shall include all combined horizontal and vertical loads on the bearing assembly.

The ball bearing assembly shall be mounted in an ASTM A48 Class 40 cast iron housing. The base of the housing shall be mounted on the top flange of the stationary

center column and designed to support the internal spur gear, the rotating clarifier mechanism, and one end of the access bridge.

The housing shall be complete with seals, oil level gauge, oil fill, and valved oil and condensation drains. A positive means of removing condensation and contaminant from the lower pinion bearing pocket shall be provided.

Lubrication of the gear teeth shall be accomplished by means of an oil dam and the meshing action of the pinion and the internal gear teeth which shall force lubricant up the face of the teeth.

F. In addition to a mechanical shear pin sprocket, the drive assembly shall also include two (2) NEMA 4 limit switches located on the worm gear housing and operated by a spring loaded actuator and aluminum pivot arm from the worm shaft. One (1) limit switch (N.O. contact is for alarm torque and one (1) limit switch (N.C. contact) is for cut-out torque. An aluminum pointer with aluminum graduated scale marked in 0, 25, 50, 75 and 100 percentages is provided for indicating load on drive at all times.

G. The motor shall be a squirrel cage, induction type, TEFC, ball bearing heavy duty unit of ample power for starting and operating the mechanism without overload, with a minimum service factor of 1.15.

1. Power supply to the equipment shall be 240/480 volt, 60 hertz, 3 phase.

2.05 WALKWAY & PLATFORM

A. One (1) 36 inch wide walkway and platform with handrails shall be supported by the drive unit and influent column at the center and the tank wall at its outer end, and shall be designed to safely withstand a live load of 50 pounds per square foot. Deflection shall not exceed L/360 when both the dead load and live loads are applied. It shall consist of two trusses or beams with 1-1/4 inch aluminum I-bar grating between the trusses or beams. The walkway shall be diagonally braced against lateral movement, and provided with handrails 42 inches high, of double-row 1-1/2 inch diameter horizontal aluminum pipe, and 4 inch high kickplates on both sides. Walkway trusses may serve as the handrail if the top chord is 3 feet-6 inches above the walking surface.

1. Stainless steel bearing plates, UHMW-PE slide plates, and anchor bolts for the wall support shall be provided by the equipment supplier and installed by the contractor. Bearing plate dimensions and anchor bolt diameter, length, quantity, and arrangement shall be per the equipment supplier. The contractor shall block out or otherwise modify the tank or support structure to accommodate walkway and supports, if required.

B. A center drive platform shall be provided which allows 24 inches clearance outside the center drive components. It shall consist of 1/4 inch aluminum checkered plate with necessary stiffeners and supports, resting on the drive unit and center column, and provided with connections to the walkway. The entire platform shall be surrounded by handrails 42 inches high of double-row 1-1/2 inch diameter horizontal aluminum pipe with 4 inch high kickplates.

2.06 INFLUENT & SLUDGE REMOVAL

A. The influent well shall be supported from the drive cage and designed to diffuse the flow into the tank. The influent well shall be made of 3/16" thick steel plate with necessary stiffening members and shall be provided with baffled port openings at the water surface to direct any floating material out of the well and to the surface skimmer. The influent well diameter shall be 8'-0" and shall project at least 3'-1" beneath the surface.

   1. Prior to the center column being grouted in place, the drive unit shall be installed, positioned, and leveled.

B. The center cage shall be of steel box truss construction. It shall be provided with connections for the two sludge rake arms and feedwell supports if required. The cage top shall be bolted to the main gear which shall rotate the cage with the attached arms and feedwell. The cage and each arm shall be designed to withstand 150 percent of the design running torque of the drive without over stressing the members. Loading to develop the torque shall be considered as uniform loads applied to each arm individually.

C. The mechanism shall include two long sludge rake arms of steel truss construction with spiral-shaped or segmented steel scraper blades and adjustable stainless steel squeegees. Squeegees shall be fastened to the rake blades with stainless steel fasteners.

   1. Scraper blades shall be designed for sufficient sludge transport capacity to handle the design solids loading rate, with the depth of the blade varying from a minimum at the tank periphery to a maximum at the tank center.

   2. Blades shall properly convey settled sludge to the sludge withdrawal point. Blades which move sludge away from the center column to the withdrawal point ring shall also be provided.

   3. The arms shall be adjustable at the cage to assure an even grout thickness over the tank bottom.

   4. The rake speed shall be sufficient to transport the necessary volume of sludge to the sludge outlet, but shall not re-suspend settled sludge.

D. Each sludge collector arm shall include a counter weighted type radially extending corner sweep assembly. The corner sweep assembly shall consist of two (2) triangular truss support arms attached to a sludge scraper blade. The supports arm shall be fabricated from minimum 2" diameter steel pipe or tubing. The sludge scraper blade shall be fabricated from a minimum 2" x 8" x 3/16" thick steel tubing. A minimum 20-gauge brass squeegee shall be attached to the scraper blade. Each corner sweep support arm shall attach to the top and bottom of the rake arm utilizing a pivot assembly. Each support arm pivot assembly shall consist of two (2) fabricated steel pillow block bearings and minimum 1 1/2" diameter steel pivot shafts. Each corner sweep support arm shall attach to the scraper blade utilizing a pivot assembly. The scraper blade pivot assembly shall consist of a steel pillow block bearing and

minimum 1 1/2" diameter steel pivot shaft. A heavy-duty fabricated steel bracket shall bolt to the end of the scraper blade and shall support a minimum 10" OD x 3 1/2" wide UHMW polyethylene wheel.

E. The counter weight assembly shall consist of a steel counter weight wheel, chain, steel guide chain sheave, and counter weight. The counter weight wheel shall be attached to the support arm pivot shaft above the top of the rake arm. The counter weight wheel and guide chain sheave shall be aligned so that a consistent load is applied to the corner sweep assembly at all times.

F. The counter weight chain shall travel in a straight line throughout its range of travel. The guide chain sheave shall be grooved and shall be a minimum 10" in diameter. The counter weight wheel segment shall be grooved.

G. The corner sweep assembly shall be balanced by using two (2) counter weight assemblies. The support arms for the counter weights shall be located above the rake arm and shall be fabricated from minimum 1/4" thick steel members

2.07 SCUM REMOVAL

A. The clarifier manufacturer shall furnish two (2) skimming devices as part of each clarifier mechanism. Each skimming mechanism shall be arranged to sweep the surface of the sedimentation compartment, automatically removing scum and floating material to a scum box at the periphery of the tank.

B. The rotating scum skimmer shall include a horizontal steel plate skimmer blade supported by vertical steel members extending up from the rake arms. The blade shall extend from a point 6 inches away from the influent feedwell to the hinged scum skimmer assembly at the tank periphery.

C. A hinged scum skimmer assembly shall be mounted on the outer end of the skimmer blade. The hinged scum skimmer assembly shall be designed to form a pocket for trapping the scum. The hinged arrangement shall insure continual contact and proper alignment between wiper blade, scum baffle, and ramp as the blade travels up the scum box ramp. The wiper blade shall have a wearing strip on its outer end which contacts the scum baffle and a neoprene strip on its lower and inner edge. The neoprene wipers shall be a minimum 1/4 inch thickness. The scum is trapped as the wiper blade meets the ramp and is raised up the ramp to be deposited into the scum trough for disposal.

D. The scum box shall be of the size specified, supported from the tank wall and connected to the scum withdrawal piping. It shall be made of ¼ inch thick welded steel plate. The box shall have a scum trough, vertical steel sides, and a sloping approach ramp that extends from 1-1/2 inches above water level to 5-1/2 inches below. A similar ramp shall be provided at the opposite end to allow the skimmer blade to lower back to the operating position. A flexible connector shall be provided for connection to the contractor supplied scum withdrawal piping in the tank wall.

E. A scum flushing valve shall be attached to the scum box which automatically opens and allows clarified liquid into the scum box to flush out solids. The valve shall actuate at every pass of the scum skimmer over the scum box, allowing sufficient

delay after deposit of the solids before flushing begins. Delay and flush duration shall be adjustable. The opening and closing of the scum flushing valve shall be one smooth continuous movement. The valve shall provide 2 to 5 gallons of flush water per each pass of the skimmer assembly.

F. The scum baffle shall consist of 1/4 inch thick x 12 inches deep fiberglass sections. In the area of the scum box the scum baffle shall extend to 24 inches starting approximately 6 feet before and ending 2 feet after the scum box. The baffle sections shall be curved and fastened to the launder wall with adjustable FRP support brackets, stainless steel fasteners, and anchor bolts.

2.08 EFFLUENT REMOVAL

A. A rectangular effluent launder shall be provided around the perimeter of the tank. The launder shall be formed as part of the concrete wall. A drop-out box shall be provided in the bottom of the launder at one point for collection and discharge of the clarified effluent.

B. An adjustable weir shall be provided around the periphery of the tank at the water surface for removal of clarified effluent.

1. The weir shall consist of 1/4 inch thick x 9 inches deep fiberglass sections with 2-1/2 inch deep 90 degree v-notches at 6 inch intervals. The weir sections shall be curved and fastened to the launder wall with special large washers, anchor bolts, and hex nuts to allow vertical adjustment.

2.09 ANCHORAGE & FASTENERS

A. All anchor bolts shall be a minimum of 1/2 inch diameter and made of type 304 stainless steel. The equipment supplier shall furnish all anchor bolts, nuts, and washers required for the equipment.

B. All structural fasteners shall be a minimum of 1/2 inch diameter and made of type 304 stainless steel. The equipment supplier shall furnish all fasteners required for the assembly of the equipment.

2.10 CONTROLS

A. Refer to Instrumentation and Control Drawings and Specifications.

2.11 PAINTING/FINISHING

A. Provide in accordance with Specification Section 09900 - Painting.

B. Sharp projections of cut or sheared edges of ferrous metals shall be ground to a radius by multiple passes of a power grinder as required to ensure satisfactory coating adhesion.

C. All iron and steel surfaces, except the drive unit, shall be field cleaned and painted by the contractor to ensure paint compatibility and assign unit responsibility for the coating system. The drive unit shall be coated with the manufacturer's standard enamel paint system.

PART 3 EXECUTION

3.01 INSTALLATION

A. The equipment shall be installed in strict accordance with the manufacturer's written instructions. The equipment shall be installed properly to provide a complete working system.

3.03 SERVICE

A. Provide the services of a manufacturer’s representative in accordance with Section 01735. The representative shall inspect and approve the installation, certify that the torque settings of the drive overload protection device are correct, perform the torque test and instruct the owner's personnel on maintenance and operation. If additional service is required due to the mechanisms not being fully operational, at the time of service requested by the contractor, the additional service days will be at the contractor's expense.

3.02 TESTING

A. Torque Tests:

1. The entire sludge collector mechanism shall be statically load tested by loading the rake arm with 150 percent of the specified design running torque. The test shall verify the torque overload control device settings for alarm and motor cutout. One truss arm shall be anchored and the load measured to demonstrate the rake arms’, cage’s, and drive unit’s ability to withstand the specified torque. Sketches and calculations shall be submitted illustrating how the torque will be applied prior to the test taking place.

B. Operation Tests:

1. The contractor shall operate the mechanism in a dry tank for a minimum of 4 continuous hours before flow is allowed to enter the system. There shall be no binding, jerky, or unusual motion exhibited during this run in period. Motor amperage shall be checked at least hourly for any unusual or higher than normal figures. After the unit has successfully passed this initial test, flow shall be introduced into the tank and the same 4 hour observation test run. If the unit should fail under any of these conditions, the test shall be halted and the problem corrected. If, after several attempts, the unit does not successfully pass the field test, the faulty portion of the equipment shall be repaired or replaced and the test re-run.

3.03 STARTUP

A. Provide startup services in accordance with Specification Section 01665

B. The equipment supplier shall provide the service of a qualified representative for one trip and one day per mechanism to inspect the mechanism installation and assist in startup.

3.04 SPARE PARTS

A. The intent of this specification is to provide uninterrupted operation for a minimum period of two (2) years. To meet this objective the clarifier manufacturer shall supply any spare parts, excluding lubricants that are required to meet this time frame.

END OF SECTION

Section 02140 Dewatering

SECTION 02140

DEWATERING

PART 1 GENERAL

1.01 SUMMARY

A. Dewatering specified in this section is applicable to all utilities and structures under the work.

B. Section Includes

1. Requirements for designing, furnishing, installing, maintaining, operating and removal of temporary dewatering systems required to lower and control water levels and hydrostatic pressures during construction.

2. Requirements for disposing of pumped water.

C. Related Sections

1. Section 02160 – Excavation Support.

2. Section 02200 – Earth Excavation, Backfill, Fill, and Grading.

1.02 DEFINITIONS

A. Dewatering: Lowering the zone of saturation and intercepting groundwater seepage which would otherwise emerge from the slopes or bottom of the excavations. The purposes of dewatering are to increase the stability of excavated slopes; prevent loss of material from beneath the slopes or bottom of the excavation; improve the excavating and hauling characteristics of on-site soil; prevent rupture or heaving of the bottom of an excavation; and dispose of pumped water. In addition, dewatering is required to place and compact structural fill.

1.03 DESIGN REQUIREMENTS

A. The Contractor is responsible for the adequacy of the dewatering system.

B. Design dewatering systems to:

1. Effectively reduce the hydrostatic pressure and lower the groundwater levels to a minimum of 2 feet below bottom of excavation in sandy soil; and lower the groundwater levels to a minimum of four (4) feet below bottom of excavation in silty soil;

2. Design and install the dewatering system such that the excavation bottom remains stable through construction and so that groundwater does not seep out of open cut slopes thereby reducing the slope stability. Pumping from the bottom of the excavation as the sole means of dewatering will not be permitted.

3. Develop a substantially dry and stable subgrade for the protection of subsequent operations;

4 Result in no damage to adjacent buildings, structures, utilities and other work, included in this contract.

C. Dewatering shall be completed in accordance with the Contractor's chosen method capable of meeting the requirements of this specification.

D. Monitoring wells shall be provided inside and outside of each excavation to demonstrate that the dewatering system is functioning as designed prior to the start of excavation (four for each excavation). The monitor well locations, depths, and descriptions, both inside and outside of the excavation, will be provided to the Contractor by the Engineer after review of the Contractor's Dewatering and Excavation Support submittals. The Contractor shall coordinate and work with the Engineer to implement the dewatering system monitoring requirements.

E. The Contractor shall provide proposed structure buoyancy calculations (annotated) with any necessary drawings and sketches to support when the construction dewatering system can be safely turned-off and removed/abandoned without damage to the Work.

F. During monitor well construction, the Contractor shall take a minimum of three (3) soil samples (minimum 8 oz jar size, larger preferred) during the installation of each monitoring well at the depth locations indicated by the Engineer, with one sample at mid slot/screen section level, for submission to the Engineer

G. Methods may include sump pumping, single or multiple stage well point or jet eductor well point systems, deep wells, or combinations thereof.

H. Locate dewatering facilities where they will not interfere with existing utilities, facilities and/or construction work to be done under this Contract.

I. Contractor is responsible to obtain all necessary permits from state and local authorities, including Veolia, regarding the operation and discharge of the dewatering system, and to conduct all necessary sampling and testing that may be required by those authorities. The Contractor is responsible for **all associated costs.**

J. Dewatering system performance shall be assessed by a program of groundwater well installations and well monitoring per this specification, and as approved by the Engineer.

K. Design the dewatering system to provide adequate settling, and filtering facilities so that the discharge does not contain suspended soil particles. Design the discharge so that the discharge location is not damaged or eroded. The Contractor shall design their sediment removal system to meet the effluent requirements of the NPDES Construction General Permit.

L. Coordinate the dewatering system design with excavation support system requirements.

M. Design, provide, install, operate, maintain and remove a temporary surface water control program, which will divert surface water away from excavations, trenches, utilities, and all other work areas.

N. Design shall include provisions to prevent freezing including but not limited to heat trace, insulation, low temperature alarms, and appurtenances required to insure continuous operation of the dewatering system.

1.04 SUBMITTALS

A. Shop Drawings

1. Design of the excavation support and dewatering systems shall be coordinated and shall be submitted in the same transmittal.

2. In accordance with Section 01300 submit the following prior to dewatering system installation:

   a. Proposed system components.
   b. Operational plan to include locations and depth of components.
   c. Method of disposal of pumped water, including method of insuring proper sediment removal should upset in dewatering system occur.

B. Quality Assurance/Control Submittals

1. In accordance with Section 01300 submit the following:

   a. Dewatering systems to be designed under the direct supervision of a Professional Engineer registered in the State of Massachusetts.
   b. Complete Certificate of Design at the end of this section.
   c. Provide documentation demonstrating ability and experience of installing contractor for the type of conditions under this contract.
   d. Names, addresses and telephone numbers of supervisory personnel actively involved in at least five successful projects requiring dewatering.

1.05 PROJECT/SITE CONDITIONS

A. Subsurface Data

1. A Geotechnical Report including test borings and laboratory soil testing data, has been completed and are including in Appendix A to the Specification.

2. The data shown is for general bidding information. Bidders are expected to examine the site, review the provided reports, exploration logs and samples to evaluate the character of subsurface conditions. No warranty, express or implied, is made concerning the accuracy of the subsurface data.

3. The Contractor shall notify the Engineer immediately if subsurface conditions encountered during construction are different from those encountered in the explorations.

4. Upon notification to the Owner, bidders will be allowed to perform additional subsurface explorations to satisfy themselves of the existing subsurface conditions at no additional cost to the Owner.

B. Environmental Requirements

1. Dispose of pumped water in accordance with Notice of Intent and the associated Order of Conditions.

C. Existing Facilities

1. Discharge of dewatering effluent to the City of Taunton drainage system or directly to Waters of the United States is not permitted.

D. Existing Conditions

1. Groundwater Measurements have been made previously and are noted in Appendix A**.**

2. Groundwater surface is subject to seasonal fluctuations, tidal influences and fluctuation during periods of heavy precipitation

PART 2 PRODUCTS

NOT USED

PART 3 EXECUTION

3.01 GENERAL

A. Operation and Performance: Once started, operate the dewatering system continuously, 24 hours per day, 7 days per week, until such time as construction work below existing groundwater levels is complete, and/or as directed by the Engineer.

1. Measure and record the performance of the dewatering system at the same time each day using a flow measurement device and the groundwater monitoring well(s) installed to monitor dewatering system performance.

B. Coordinate the dewatering Work schedule with the General Contractor, and other subcontractors performing related work.

C. The Contractor shall coordinate a Pre-Construction Meeting with the Engineer to discuss Contractor means, methods, procedures and schedule for dewatering systems construction, operation and removal/abandonment when no longer needed.

D. Complete installation of the dewatering system in accordance with the submittal design approved by the Engineer. Provide all labor, materials, equipment, and supervisory personnel required to perform the Work.

E. Store materials at the designated locations in an organized fashion in order to execute the Work in an expeditious manner and to permit on-going existing pump station operations.

F. Layout the Work in the field and mobilize labor, materials, equipment, and supervisory personnel necessary for the performance of dewatering work.

G. The Contractor shall adapt and modify the dewatering and sedimentation treatment systems as required throughout the course of the Work to meet applicable requirements.

3.02 SITE PREPARATION

A. Surface Drainage

1. Construct dikes, ditches, pipelines, sumps or other means to intercept and divert precipitation and surface water away from excavations.

B. Drainage of Excavated Areas

1. Construct dikes, ditches, pipelines, sumps or other means to collect surface and seepage water which may enter the excavation.
2. Discharge water through settling basins or method approved by Engineer when water is to be deposited into an existing watercourse.

3.03 INSTALLATION

A. Advise Engineer of changes made to Operation Plan as submitted under article 1.04 of this section, made to accommodate field conditions

B. Install additional dewatering facilities as needed to adequately dewater as specified herein at no additional cost to the Owner.

C. Complete effluent sampling in accordance with the Industrial Pretreatment Permit.

D. All wells, wellpoints and sumps shall be provided with suitable filter materials to prevent the migration or pumping of existing soil fines and subsequent subgrade weakening and disturbance.

E. Monitoring (Observation) Wells:

1. The Contractor shall install nominal 2-inch diameter schedule 40 PVC pipe solid riser and slotted screen pipe section observation wells in conformance with this specification. Groundwater wells are proposed to monitor groundwater levels both inside the excavation to assess the adequacy of the dewatering system, and outside of the excavation to assess the extent of groundwater draw-down.

2. The Contractor shall take a minimum of three (3) soil samples (minimum 8 oz jar size) during the installation of each monitoring well at the depth locations indicated by the Engineer, with one sample at mid slot/screen section level, for submission to the Engineer.

3. The Contractor shall inform the Engineer a minimum of 48 hours prior to observation well installations so that the Engineer may witness the installations of all observation wells.

4. The Contractor shall monitor groundwater elevations and keep a log of groundwater elevations and maintain at least the minimum number of monitoring wells indicated by the Engineer; additional monitoring wells may be required by the Engineer.

5. The Contractor shall:

   a. Observe and record the elevations of groundwater.

b. Repair or replace, within 24 hours, observation wells that become inactive, damaged, or destroyed. In areas where observation wells are not functioning properly, suspend construction activities until reliable groundwater observations can be made. Add or remove water from observation well risers to demonstrate that observation wells are functioning properly, as/if directed by the Engineer.

c. Fill observation wells with an approved flowable fill or other material approved by the Engineer when dewatering is completed, and the Engineer has approved observation well decommissioning.

3.04 OPERATION

A. Operate dewatering systems to lower the groundwater level in excavations allowing the Work to be performed on a stable dry subgrade.

B. Modify dewatering procedures which cause, or threaten to cause, damage to new or existing facilities, in the opinion of the Engineer, to prevent further damage. Modifications shall be made at no additional expense to the Owner.

C. Prevent disturbance of foundation soils and loss of ground as water is removed.

D. Notify the Engineer of disturbance to the foundation soils caused by an interruption or inadequacy of the dewatering system.

E. Maintain on-site auxiliary equipment to operate the dewatering system continuously, while the excavation is open and as directed by the Engineer.

F. Provide the Engineer access to the dewatering systems at all times to obtain samples of the dewatering effluent prior to and after treatment. A flow meter capable of measuring to the nearest 0.1 gallons shall be installed at the discharge point prior to discharge entry into the existing pump station's wet well.

G. It shall be the responsibility of the Contractor to remove sediment and suspended particles from the dewatering effluent to comply with permit and project requirements. These methods shall include, as a minimum, baffled sedimentation tank(s) and/or basins of sufficient capacity, and other measures as required and as approved by the Engineer.

H. If sediment or other materials discharged from the dewatering system accumulates in the drains, conduits or other utilities, the Contractor shall be responsible to completely clean and remove all sediment from impacted utilities to the satisfaction of the Owner and at no additional cost to the Owner.

3.05 COMPLETION

A. Upon completion of the dewatering operations, dismantle and remove all material and equipment associated with the system. Seal all dewatering wells upon completion of the dewatering by pressure injecting a grout capable of sealing the wells and preventing leakage.

END OF SECTION

CERTIFICATE OF DESIGN

Re: Contract Between

OWNER: _____
(Name)

and
CONTRACTOR: _____
(Name)

on
CONTRACT: _____
(Title)

_____ Dated:_____
(Number)

Contractor hereby certifies that_____
(Designer)

1. Is licensed or registered to perform professional engineering work in the state of

_____
(Location of Project)

2. Is qualified to design the_____
(Item)
specified in Section_____ of the subject contract;

3. Has designed_____before;

4. Has prepared the design in full compliance with the applications and requirements of Section_____ of subject contract including all applicable laws, regulations, rules and codes; and

5. The work has been signed and sealed pursuant to the applicable state law.

FOR: _____
(Contractor)

BY: _____
(Signature)

_____ Dated:_____
(Name and Title)