GENERAL NOTES

1. HVAC WORK IS INDICATED DIAGRAMMATICALLY. EXACT LOCATIONS OF ALL COMPONENTS ARE TO BE DETERMINED IN THE FIELD AND BY THE ACTUAL BUILDING CONDITIONS. EXISTING DUCTS, PIPING OR EQUIPMENT INTERFERING WITH OTHER INSTALLATIONS SHALL BE RELOCATED AS REQUIRED AT NO ADDITIONAL COST TO THE OWNER. EXACT LOCATIONS MUST HAVE THE APPROVAL OF THE ARCHITECT.
2. ALL WORK SHALL BE COORDINATED WITH ALL OTHER TRADES BEFORE ANY INSTALLATION IS MADE.
3. ALL EQUIPMENT SHALL BE INSTALLED IN ACCORDANCE WITH STATE CODES, MANUFACTURER'S APPROVED PUBLISHED LITERATURE, AND AUTHORITIES HAVING JURISDICTION.
4. INSTALLATION OF EQUIPMENT SHALL PERMIT ACCESSIBILITY FOR SERVICE AND/ OR REPLACEMENT.
5. ALL CEILING MOUNTED EQUIPMENT SHALL BE INSTALLED IN SUCH A WAY THAT LIGHTS, PIPING, AND DUCTWORK DO NOT BLOCK ACCESS TO UNITS AND RELATED ACCESSORIES.
6. HVAC CONTRACTOR SHALL COORDINATE ALL WALL, CEILING, FLOOR, ROOF AND BEAM PENETRATIONS WITH ARCHITECT AND STRUCTURAL ENGINEER.
7. ALL DUCT SIZES SHOWN ARE NET INSIDE CLEAR DIMENSIONS.
8. PROVIDE VOLUME DAMPERS AT EVERY MAIN BRANCH TAKE-OFF AND AS INDICATED AND IN SUCH OTHER LOCATIONS WHERE REQUIRED TO PROPERLY BALANCE THE SYSTEM. DO NOT INSTALL VOLUME DAMPERS IN NECKS OF DIFFUSERS OR AT DISCHARGE OR INLET GRILLES IN DUCTWORK.
9. PROVIDE INSTRUMENT TEST HOLES WITH CAPS IN AIR DISTRIBUTION SYSTEMS AS REQUIRED TO BALANCE SYSTEM.
10. HVAC CONTRACTOR SHALL BE RESPONSIBLE FOR ALL SHEETMETAL TRANSITIONS AT AIR TERMINAL UNITS, FANS, COILS, AND OTHER SIMILAR HVAC EQUIPMENT.
11. ALL OPEN ENDED DUCTS IN THE CEILING PLENUM SHALL BE UNOBSTRUCTED FOR A MINIMUM DISTANCE OF 24" FROM THE OPENING TO ALLOW FREE AIR FLOW AND SHALL HAVE 3/4" WIRE MESH SCREENING.
12. ALL TRANSFER DUCTS SHALL BE INTERNALLY LINED.
13. ALL MISCELLANEOUS STRUCTURAL SUPPORTS REQUIRED FOR HVAC EQUIPMENT INSTALLATION SHALL BE PROVIDED BY HVAC SUBCONTRACTOR.
14. EXACT LOCATION OF CEILING DIFFUSERS, GRILLES AND REGISTERS TO BE DETERMINED BY ARCHITECTURAL REFLECTED CEILING PLAN.
15. INSTALL ALL PIPING BELOW DUCTWORK UNLESS CLEARANCE CONDITION REQUIRES PIPING TO BE ABOVE.
16. EXACT ELEVATION FOR SIDE WALL DIFFUSERS, REGISTERS AND GRILLES SHALL BE APPROVED BY THE ARCHITECT BEFORE INSTALLATION.
17. UNLESS OTHERWISE NOTED, ALL PIPING RUNOUTS SHALL BE 3/4"
18. ALL EXPOSED EQUIPMENT (REGISTERS, UNIT HEATERS, ETC..) SHALL HAVE COLORS SELECTED BY THE ARCHITECT, UNLESS NOTED OTHERWISE.
19. HVAC SUBCONTRACTOR SHALL BLANK OFF AND INSULATE ALL UNUSED LOUVER AREA.
20. PITCH AIR INTAKE PLENUMS AND PROVIDE DRAIN TO NEAREST FLOOR DRAIN.
21. ALL REGISTERS, GRILLES AND DIFFUSERS LOCATED IN WALLS NEAR FLOOR SHALL BE HEAVY-DUTY TYPE DESIGNED TO WITHSTAND RUGGED IMPACT. REFER TO SCHEDULE. THE SECTION OF DUCTWORK BEHIND THE AIR DEVICE SHALL BE PAINTED FLAT BLACK.
22. EXACT LOCATION OF THERMOSTAT TO BE COORDINATED WITH FINAL LOCATION OF WALL MOUNTED ARCHITECTURAL AND ELECTRICAL EQUIPMENT.
23. ALL MAIN BRANCH PIPES FROM RISERS SHALL HAVE ISOLATION VALVES NEAR SHAFTS. PROVIDE SHUT-OFF VALVES AT EACH SUPPLY BRANCH AND COMBINATION BALANCING SHUT-OFF VALVE AT EACH RETURN BRANCH.
24. PROVIDE FLEXIBLE CONNECTOR ON INTAKES AND DISCHARGES OF ALL AIR HANDLING UNITS.
25. REFRIGERATION PIPING SIZED BY UNIT MANUFACTURER. SUBMIT CALCULATIONS TO ENGINEER FOR APPROVAL.
26. DUCT MOUNTED SMOKE DETECTOR – FURNISHED AND WIRED BY THE ELECTRICAL CONTRACTOR, INSTALLED BY THE HVAC CONTRACTOR.
27. ROOF OPENINGS SHALL BE SIZED FROM APPROVED SHOP DRAWINGS.
28. ALL FLOOR MOUNTED MECHANICAL EQUIPMENT, BOILERS, PUMPS, AIR HANDLERS, ETC. SHALL HAVE A CONCRETE PAD 4" HIGH AND 6" BEYOND EQUIPMENT FOOT PRINT ON ALL FOUR SIDES. CONCRETE PADS SHALL BE SIZE FROM APPROVED SHOP DRAWINGS. CONCRETE PADS BY G.C.
29. ALL DAMPER MOTORS SHALL BE 24 VOLT.
30. PROVIDE DUCT MOUNTED SMOKE DAMPERS AT ALL SMOKE BARRIERS, REFER TO ARCH. DRAWINGS FOR LOCATION. SMOKE DAMPERS SHALL BE CLOSED AND ASSOCIATED EXH. FAN OR AHU SHALL BE SHUT-DOWN UPON DETECTION OF SMOKE AS SENSED BY AREA SMOKE DETECTORS. DAMPERS SHALL BE RUSKIN TYPE SD 60 OR EQUAL.

DEMOLITION NOTES

1. UNLESS OTHERWISE NOTED, ALL EXISTING HVAC SYSTEMS WITHIN HATCH MARKS (HOT WATER SUPPLY, HOT WATER RETURN, SUPPLY DUCTWORK, EXHAUST DUCTWORK, ETC) AND ASSOCIATED EQUIPMENT IS TO BE DEMOLISHED OR SALVAGED. REMOVE THE EQUIPMENT TO BE DEMOLISHED OR SALVAGED PER SECTION 02050. ALL CONTROL DEVICES ASSOCIATED WITH THE DEMOLISHED EQUIPMENT SHALL BE REMOVED.
2. NO PIPING, DUCTWORK OR EQUIPMENT INDICATED FOR DEMOLITION WILL BE REUSED OR SALVAGED UNLESS SPECIFICALLY NOTED AS SUCH. ALL EQUIPMENT REMOVED SHALL BE REMOVED FROM SITE AND PROPERLY DISPOSED OF, PRIOR TO REMOVAL OF EQUIPMENT COORDINATE WITH OWNER FOR ANY EQUIPMENT THE OWNER WILL KEEP.
3. EXISTING EQUIPMENT INDICATED ON THE DEMOLITION PLANS ARE BASED ON SITE OBSERVATIONS AND IT IS NOT THE INTENTION OF THESE DRAWINGS TO SHOW ALL EQUIPMENT AND MATERIALS TO BE DISCONNECTED AND/OR REMOVED.

ABBREVIATIONS

ACD	AUTOMATIC CONTROL DAMPER
AD	ACCESS DOOR
AFF	ABOVE FINISHED FLOOR
AHAP	AS HIGH AS POSSIBLE
AP	ACCESS PANEL
ARCH	ARCHITECT
ATC	AUTOMATIC TEMPERATURE CONTROL
BDD	BACKDRAFT DAMPER
BTU	BRITISH THERMAL UNIT
BTUH	BRITISH THERMAL UNIT PER HOUR
BOD	BOTTOM OF DUCT
CAP	CAPACITY
CD	CEILING DIFFUSER
CFM	CUBIC FEET PER MINUTE
CO	CLEANOUT
CONT	CONTROLLER
CP	CUT AND CAP
DIA	DIAMETER
DB	DRY BULB TEMPERATURE
DC	DUST COLLECTOR
DDC	DIRECT DIGITAL CONTROL
DN	DOWN
DWG	DRAWING
DX	DIRECT EXPANSION COOLING
EA	EXHAUST AIR
EAT	ENTERING AIR TEMPERATURE
EBB	ELECTRIC BASEBOARD RADIATION
ECH	ELECTRIC CABINET HEATER
ECON	AIR-SIDE ECONOMIZER
EF	EXHAUST FAN
EFF	EFFICIENCY
ELV	ELEVATION
ER	EXHAUST REGISTER
ESP	EXTERNAL STATIC PRESSURE
ETR	EXISTING TO REMAIN
EWT	ENTERING WATER TEMPERATURE
EXH	EXHAUST
FA	FREE AREA
FD	FIRE DAMPER
FLA	FULL LOAD AMPS
FOB	FLAT ON BOTTOM
FOT	FLAT ON TOP
FPI	FINS PER INCH
FPM	FEET PER MINUTE
FT	FEET
FTR	FINNED TUBE RADIATION
GAL	GALLONS
GALV	GALVANIZED
GC	GENERAL CONTRACTOR
GF	GLYCOL FEED
GPM	GALLONS PER MINUTE
HP	HORSEPOWER
HVAC	HEATING, VENTILATING AND AIR CONDITIONING
HGRH	HOT GAS REHEAT
HW	HOT WATER
HZ	HERTZ
IN	INCHES
KE	KITCHEN EXHAUST
KW	KILOWATTS
LAT	LEAVING AIR TEMPERATURE
LD	LINEAR DIFFUSER
LF	LINEAR FEET
LWT	LEAVING WATER TEMPERATURE
MBH	THOUSANDS OF BTU'S PER HOUR
MCC	MOTOR CONTROL CENTER
NC	NORMALLY CLOSED
NIC	NOT IN CONTRACT
NO	NORMALLY OPEN
NTS	NOT TO SCALE
OA	OUTSIDE AIR
OAT	OUTSIDE AIR TEMPERATURE
OBD	OPPOSED BLADE DAMPER
OD	OUTSIDE DIAMETER
OED	OPEN ENDED DUCT
POS	PROVIDED UNDER OTHER SECTIONS
PSI	POUNDS PER SQUARE INCH (GAUGE)
PD	PRESSURE DROP
PRV	PRESSURE REDUCING VALVE
PG	PROPYLENE GLYCOL
R	RETURN
RA	RETURN AIR
RB	REBALANCE
RF	RETURN/EXHAUST FAN
RG	RETURN GRILLE
RM	ROOM
RPM	REVOLUTIONS PER MINUTE
RR	RETURN REGISTER
S	SUPPLY
SA	SUPPLY AIR
SAT	SUPPLY AIR TEMPERATURE
SF	SQUARE FEET, SUPPLY FAN
SP	STATIC PRESSURE
SR	SUPPLY REGISTER
SS	STAINLESS STEEL
STL	STEEL
TYP	TYPICAL
UC	UNDERCUT DOOR
V	VOLTS
VAV	VARIABLE AIR VOLUME
VD	VOLUME DAMPER
VFD	VARIABLE FREQUENCY DRIVE
W/	WITH
W/O	WITHOUT
WB	WET BULB TEMPERATURE
WG	WATER GAUGE
WMS	WIRE MESH SCREEN

PIPING LEGEND

CD	CONDENSATE DRAIN
HWS	HOT WATER SUPPLY
HWR	HOT WATER RETURN
RL	REFRIGERANT LIQUID
RS	REFRIGERANT SUCTION

EQUIPMENT TAG SYMBOLS & ABBREVIATIONS

EQUIPMENT NOT REQUIRING ELECTRIC SERVICE (TAG / NO) → SEE SCHEDULE FOR PERFORMANCE REQUIREMENTS ← (TAG / NO) EQUIPMENT REQUIRING ELECTRIC SERVICE

FTR-1 / MBH / LENGTH	FINNED TUBE RADIATION
ACCU	AIR COOLED CONDENSING UNIT
AHU	AIR HANDLING UNIT
AF	AIR FILTER
AS	AIR SEPARATOR
B	BOILER
CC	COOLING COIL
CH	CHILLER
CUH	CABINET UNIT HEATER
C	CONVECTOR
EF	EXHAUST FAN
ERV	ENERGY RECOVERY VENTILATOR
ET	EXPANSION TANK
EUH	ELECTRIC UNIT HEATER
FCU	FAN COIL UNIT
FMS	FLOW MEASURING STATION
FTR	FIN-TUBE RADIATION
HC	HEATING COIL
HP	HEAT PUMP
HRU	HEAT RECOVERY UNIT
HV	HEATING AND VENTILATING UNIT
IRV	INTAKE ROOF VENT
MAU	MAKEUP AIR UNIT
P	PUMP
REF	RETURN/EXHAUST FAN
RF	RETURN FAN
RTU	ROOFTOP UNIT
SA	SOUND ATTENUATOR
SF	SUPPLY FAN
TU	TERMINAL UNIT
UH	UNIT HEATER
UV	UNIT VENTILATOR
VAV	VARIABLE AIR VOLUME UNIT
RB / 2000	REBALANCE EXISTING CFM TO INDICATED AMOUNTED

INSTRUMENTATION

PI	LOCAL PRESSURE GAUGE W/SHUTOFF AND SNUBBER
DPI	DIFFERENTIAL PRESSURE GAUGE W/SHUTOFFS AND SNUBBERS
TI	LOCAL TEMPERATURE INDICATION
Th	HEATING ONLY THERMOSTAT
Tc	COOLING ONLY THERMOSTAT
T	HEATING/COOLING THERMOSTAT
TT	TEMPERATURE TRANSMITTER
PT	PRESSURE TRANSMITTER
SD	SMOKE DETECTOR
HD	HEAT DETECTOR
FT	FLOW TRANSMITTER
SP	STATIC PRESSURE SENSOR
H	HUMIDITY SENSOR OR HUMIDISTAT
CO2	CARBON DIOXIDE DETECTOR
CO	CARBON MONOXIDE DETECTOR
OS	OCCUPANCY SENSOR
PS	PRESSURE SENSOR SWITCH

VALVES AND ACCESSORIES

	GATE VALVE
	BALL VALVE
	BALL VALVE WITH HOSE BIBB, CAP & CHAIN
	BUTTERFLY VALVE
	GLOBE VALVE
	PRESSURE REDUCING VALVE (SELF-CONTAINED)
	BACKPRESSURE REGULATOR (SELF-CONTAINED)
	CHECK VALVE (SWING TYPE)
	CHECK VALVE (SILENT TYPE)
	STRAINER W/BALL VALVE, HOSE BIBB & CAP (GATE VALVE FOR STEAM)
	ANGLE VALVE
	BUTTERFLY VALVE, TWO POSITION ACTUATOR
	BALL VALVE, TWO POSITION ACTUATOR
	SOLENOID VALVE
	TWO-WAY AUTOMATIC CONTROL VALVE, MODULATING ACTUATOR
	TWO-WAY AUTOMATIC CONTROL VALVE, TWO POSITION ACTUATOR
	THREE-WAY AUTOMATIC CONTROL VALVE, MODULATING ACTUATOR
	THREE-WAY AUTOMATIC CONTROL VALVE, TWO POSITION ACTUATOR
	AUTOMATIC FLOW CONTROL VALVE (PRESSURE INDEPENDENT)
	COMBINATION FLOWMETER/SHUT OFF/BALANCING VALVE
	FLOW SWITCH
	FLOW METER
	SAFTEY RELIEF VALVE
	UNION OR FLANGE (SEE SPEC)
	BLIND FLANGE
	END CAP
VB	VACUUM BREAKER
PT	PRESSURE/TEMPERATURE WELL
AAV	AUTOMATIC AIR VENT WITH ISOLATION VALVE
MAV	MANUAL AIR VENT
	REDUCER (ECCENTRIC-FLAT ON BOTTOM OR FLAT ON TOP)
	REDUCER (CONCENTRIC)
	FLEXIBLE CONNECTION
	EXPANSION JOINT
	PIPE GUIDE
	ANCHOR
	RISE (SINGLE LINE – PLAN VIEW)
	DROP (SINGLE LINE – PLAN VIEW)
	TOP TAKEOFF / BOTTOM TAKEOFF
	PIPE BREAK (SINGLE LINE)
	DIRT LEG
	CLEAN-OUT FOR CONDENSATE DRAIN
	RISE (DOUBLE LINE – PLAN VIEW)
	DROP (DOUBLE LINE – PLAN VIEW)
	PIPE BREAK (DOUBLE LINE)
	DIRECTION OF FLOW IN PIPE
UP	PITCH PIPE UP IN DIRECTION OF FLOW
DN	PITCH PIPE DOWN IN DIRECTION OF FLOW
	FINNED TUBE WITH NO ENCLOSURE
	FINNED TUBE WITH WITH ENCLOSURE

FLOW DIAGRAM EQUIPMENT SYMBOLS

	CENTRIFUGAL PUMP
	POSITIVE DISPLACEMENT PUMP
	FILTER (WATER SERVICE)
	SUCTION DIFFUSER W/STRAINER
C	* H = HEATING COIL C = COOLING COIL RH = REHEAT COIL PH = PREHEAT COIL DX = DIRECT EXPANSION COIL
ET 1	EXPANSION TANK
AAV AS 1	AIR SEPARATOR

DUCTWORK LEGEND/SYMBOLS

12"x"10	RECTANGULAR DUCTWORK – FIRST DIMENSION IS SIDE SHOWN (IN.) FREE AREA
12"ø	ROUND DUCT DIAMETER (IN.)
	SUPPLY/OUTSIDE AIR DUCTWORK UP
	SUPPLY/OUTSIDE AIR DUCTWORK DOWN
	RETURN/EXHAUST AIR DUCTWORK UP
	RETURN/EXHAUST AIR DUCTWORK DOWN
	FLEXIBLE CONNECTION
	ACOUSTICALLY LINED DUCTWORK
R	CHANGE OF ELEVATION IN DIRECTION OF AIRFLOW (R)RISE,(D)DROP
12x10	RECTANGULAR DUCT TRANSITION
12x10 8x6	RECTANGULAR TO SINGLE LINE TRANSITION
12x10 10ø	RECTANGULAR TO ROUND TRANSITION
	MITERED ELBOW W/ TURNING VANES
	SUPPLY AIR DIFFUSER BELOW DUCT
	RETURN OR EXHAUST REGISTER BELOW DUCT
	ROUND DUCT UP
	SUPPLY AIR DIFFUSER (SQUARE OR RECTANGULAR)
	SUPPLY AIR DIFFUSER (LINEAR)
	RETURN AIR GRILLE OR REGISTER
VD	MANUAL VOLUME DAMPER
FD	SELF-CLOSING FIRE DAMPER W/ACCESS DOOR
SD	SMOKE DAMPER W/ACCESS DOOR
ACD	AUTOMATIC CONTROL DAMPER
SFD	COMBINATION SMOKE/FIRE DAMPER W/ACCESS DOOR
	SUPPLY AIR BLOW DIRECTION
	EXHAUST / RETURN / OR INTAKE

DIFFUSER/REGESTER TAG

TT-X	TYPE-BLOW (CD-1 = CEILING DIFFUSER)
0000	CFM
0"x0"	SIZE

	INLINE CENTRIFUGAL FAN
	ROOF FAN OR VENT
	TERMINAL UNIT (COOLING ONLY)
	TERMINAL UNIT (HEATING/COOLING)
	EXHAUST FAN (SHOWN ON ROOF PLAN)
	EXHAUST FAN (SHOWN ON FLOOR PLAN)

SINGLE LINE DUCTWORK

	DUCTWORK
	SUPPLY/OUTSIDE AIR DUCTWORK UP
	SUPPLY/OUTSIDE AIR DUCTWORK DOWN
	RETURN/EXHAUST AIR DUCTWORK UP
	RETURN/EXHAUST AIR DUCTWORK DOWN
	RECTANGULAR DUCTWORK W/ ACOUSTICAL LINING
	FLEXIBLE CONNECTION
	DUCT TRANSITION
	90° TAKE OFF
	90° ELBOW
	BULLHEAD SPLIT SUPPLY/RETURN

PREPARED BY

BETA
www.BETA-Inc.com

REGISTERED PROFESSIONAL

COMMONWEALTH OF MASSACHUSETTS
ROBERT B. RHOW
MECHANICAL
No. 43505
REGISTERED PROFESSIONAL ENGINEER

SUBCONSULTANT

SAR ENGINEERING, INC.
Mechanical/Electrical Engineers
150 Grossman Drive, Suite 309
Braintree, Massachusetts 02184
617 328-9215
web: www.sar.com

PROJECT

Taunton Wastewater Treatment Facility Improvements Phase 1

Taunton, MA

TITLE

Hvac Legend and General Notes

NO.	REVISIONS	DATE

DRAWN BY:	RLB
DESIGNED BY:	RHB
CHECKED BY:	RHB
ISSUE DATE:	7/2/21
BETA JOB NO.:	6050

SCALE

NONE

UNLESS OTHERWISE NOTED OR CHANGED BY REPRODUCTION

SHEET NO.

H-0.1

6/30/2021 9:57 AM W:\T-PROJECTS\T-18009.00 - TAUNTON WWTF UPGRADES\HVAC DEPARTMENT\PHASE 1\18009.00 HVAC LEGEND SCHEDULE AND DETAILS-PHASE 1.DWG (BETA STB BW STB)

ENERGY RECOVERY UNIT SCHEDULE (PART 1)

ERV –

TAG NO.	BUILDING	SUPPLY AIR PERFORMANCE							EXHAUST AIR NORMAL PERFORMANCE						DX COOLING COIL								HOT WATER HEATING COIL									ELECTRIC HEATER DATA								ELECTRICAL DATA				
		SUPPLY IN CFM	MIN. OA IN CFM	ESP (IN WC)	TSP (IN WC)	FAN RPM	OPERATING POWER HP	MOTOR SIZE HP	EXH./RET. OUT CFM	E.S.P. IN (W.C.)	TOTAL SP IN (W.C.)	FAN RPM	OPERATING POWER HP	MOTOR SIZE HP	REFRIG TYPE	TOTAL MBH	SENSIBLE MBH	ROWS	EAT (DB °F)	EAT (WB °F)	LAT (DB °F)	LAT (WB °F)	CAPACITY (MBH)	GPM	EAT (DB °F)	LAT (DB °F)	EWT (DB °F)	LWT (DB °F)	% GLYCOL	WPD (FT)	APD (IN WC)	KW	ENT. °F	LVG. °F	AMPS	CONTROL	V	PHASE	HZ	MCA	MOCP	V	PHASE	HZ
2ERV–1	PIPE GALLERY BUILDING	11,343	11,343	1.0	3.016	1961	(2) 4.88	(2) 5	11,343	0.65	2.226	2055	(2) 5.43	(2) 7.5	N/A	N/A	N/A	N/A	N/A	N/A	N/A	N/A	415.1	44.6	41.6	75.4	180	160	40% P.G.	9.1	0.051	N/A	N/A	N/A	N/A	N/A	N/A	N/A	N/A	35.7	45	480	3	60
2ERV–2	PIPE GALLERY BUILDING	13,505	13,505	1.0	3.099	2050	(2) 4.94	(2) 5	13,505	1.0	2.528	1588	(2) 2.77	(2) 3	N/A	N/A	N/A	N/A	N/A	N/A	N/A	N/A	765.1	85.5	41.2	95.6	180	160	40% P.G.	7.5	0.474	N/A	N/A	N/A	N/A	N/A	N/A	N/A	N/A	29.8	35	480	3	60
5ERV–1	CHEMICAL HANDLING BUILDING	2,825	950	1.5	3.126	2820	(1) 2.36	(1) 5	950	1.0	1.606	1699	(1) 0.53	(1) 5	R–410a	68.3	60.9	4	76.0	63.6	56.3	5.5	N/A	N/A	N/A	N/A	N/A	N/A	N/A	N/A	N/A	20	67.7	90.1	–	SCR	480	3	60	23.9	30	480	3	60
6ERV–1	BLOWER BUILDING	6,000	6,000	1.0	3.388	2039	(1) 5.5	(1) 7.5	6,000	1.0	2.329	2089	(1) 5.64	(1) 7.5	R–410a	339.8	205.3	6	80.4	68.0	49.3	49.1	N/A	N/A	N/A	N/A	N/A	N/A	N/A	N/A	N/A	40	48.0	69.0	–	SCR	480	3	60	76.6	90	480	3	60
7ERV–1	SOLID HANDLING BLDG. 1ST FLOOR	13,500	13,500	1.5	3.76	2265	(2) 7.46	(2) 7.5	13,500	1.5	3.282	2465	(2) 9.39	(2) 10	N/A	N/A	N/A	N/A	N/A	N/A	N/A	N/A	787.9	84.7	46.7	100.6	180	160	40% P.G.	9.4	0.144	N/A	N/A	N/A	N/A	N/A	N/A	N/A	N/A	48.2	60	480	3	60
7ERV–2	SOLID HANDLING BLDG. 1ST FLOOR	11,900	11,900	1.5	3.385	2120	(2) 6.29	(2) 7.5	11,900	1.5	3.006	2252	(2) 7.18	(2) 7.5	N/A	N/A	N/A	N/A	N/A	N/A	N/A	N/A	717.6	77.2	48.8	104.5	180	160	40% P.G.	7.9	0.12	N/A	N/A	N/A	N/A	N/A	N/A	N/A	N/A	41.9	50	480	3	60
7ERV–3	SOLID HANDLING BLDG. 2ND FLOOR	9,100	9,100	0.90	2.7	2197	(2) 3.52	(2) 5	9,100	0.60	2.521	2342	(2) 4.24	(2) 5	N/A	N/A	N/A	N/A	N/A	N/A	N/A	N/A	343.6	37.0	53.1	87.9	180	160	40% P.G.	6.2	0.037	N/A	N/A	N/A	N/A	N/A	N/A	N/A	N/A	28.7	35	480	3	60
7ERV–4	SOLID HANDLING BLDG. 2ND FLOOR	9,100	9,100	0.90	2.7	2197	(2) 3.52	(2) 5	9,100	0.60	2.521	2342	(2) 4.24	(2) 5	N/A	N/A	N/A	N/A	N/A	N/A	N/A	N/A	343.6	37.0	53.1	87.9	180	160	40% P.G.	6.2	0.037	N/A	N/A	N/A	N/A	N/A	N/A	N/A	N/A	28.7	35	480	3	60
9ERV–1	ADMINISTRATION BUILDING	3,200	3,200	1.5	3.408	1935	(1) 2.79	(1) 3	3,200	1.5	2.809	3297	(1) 3.41	(1) 5	R–410a	192.9	114.4	6	80.9	68.5	48.4	48.3	168.5	18.1	45.9	94.5	180	160	40% P.G.	1.3	0.133	N/A	N/A	N/A	N/A	N/A	N/A	N/A	N/A	12.4	15	480	3	60

ENERGY RECOVERY UNIT SCHEDULE (PART 2)

ERV –

TAG NO.	ENERGY RECOVERY WHEEL PERFORMANCE								WEIGHT LBS	SUPPLY FILTER	OUTDOOR FILTER	MANUFACTURER MODEL NUMBER	REMARKS
	WINTER CONDITIONS DESIGN				SUMMER CONDITIONS DESIGN								
	OUTDOOR		INDOOR		OUTDOOR		INDOOR						
	DB °F	WB °F	DB °F	RH%	DB °F	WB °F	DB °F	RH%					
2ERV–1	7.4	5.3	46.7	50	90.8	76.2	80.7	50	5,379	MERV–6	MERV–8	GREENHECK RVE–120–74–30H	1 2 3 4 5 6 7 8 9 10
2ERV–2	7.4	5.3	46.7	50	90.8	76.2	80.7	50	7,604	MERV–6	MERV–8	GREENHECK RVE–180–81–30H	1 2 3 4 5 6 7 8 9 10
5ERV–1	7.4	5.3	63.5	50	90.8	76.2	80.7	50	3,108	MERV–6	MERV–8	GREENHECK RVE–40–30–30L–5D	1 2 3 4 5 6 8 9 10 11
6ERV–1	7.4	5.3	63.5	50	90.8	76.2	80.7	50	4,949	MERV–6	MERV–8	GREENHECK RVE–85–52–30H–30D	1 2 3 4 5 6 7 8 9 10 11
7ERV–1	7.4	5.3	46.7	50	90.8	76.2	80.7	50	5,307	MERV–6	MERV–8	GREENHECK RVE–120–74–30H	1 2 3 4 5 6 7 8 10 12
7ERV–2	7.4	5.3	48.8	50	90.8	76.2	80.2	50	5,259	MERV–6	MERV–8	GREENHECK RVE–120–74–30H	1 2 3 4 5 6 7 8 10 12
7ERV–3	7.4	5.3	53.1	50	90.8	76.2	79.2	50	5,089	MERV–6	MERV–8	GREENHECK RVE–120–74–30H	1 2 3 4 5 6 7 8 10 12
7ERV–4	7.4	5.3	53.1	50	90.8	76.2	79.2	50	5,089	MERV–6	MERV–8	GREENHECK RVE–120–74–30H	1 2 3 4 5 6 7 8 10 12
9ERV–1	7.4	5.3	63.5	50	90.8	76.2	80.7	50	2,525	MERV–6	MERV–8	GREENHECK RVE–40–36–30H	1 2 3 4 5 6 7 8 9 10

1 BASE RAILS 2 LOW LEAKAGE DAMPERS 3 RECIRC. DAMPER 4 FACTORY SUPPLY & EXHAUST FAN VFD 5 ENERGY BYPASS WHEEL DAMPER
6 FACTORY MOUNTED DISCONNECT 7 SINGLE POINT POWER CONNECTION 8 COORDINATE SUPPLY & EXHAUST BOTTOM DISCHARGE WITH FLOOR PLANS
9 INSTALLED OUTDOORS 10 AIR FLOW STATIONS 11 TWO POINT POWER CONNECTION (ONE FOR UNIT AND ONE FOR ELECTRIC HEAT)
12 INSTALLED INDOORS

EXHAUST FAN SCHEDULE

EF –

TAG NO.	BUILDING	CFM	ESP (IN WC)	SPEED (RPM)		DRIVE	ELECTRICAL DATA				MANUFACTURER & MODEL #	REMARKS
				FAN	MOTOR		HP	V	PH	HZ		
5EF–1	CHEMICAL HANDLING BUILDING	450	0.45	1353	1725	DIRECT	1/4	120	1	60	GREENHECK SE1–12–432–VG	
5EF–2	CHEMICAL HANDLING BUILDING	125	0.45	1014	1350	DIRECT	1/4	120	1	60	GREENHECK AER–E20C–605–VG	
9LEF–1	ADMIN BUILDING LAB EXHAUST	660	2.50	3687	3600	DIRECT	1.5	480	3	60	GREENHECK VEKTOR–H–9	

MAKE-UP AIR UNIT SCHEDULE

MUA

TAG NO.	LOCATION	SUPPLY BLOWER					HEATING COIL								ELECTRICAL DATA					WEIGHT LBS	MANUFACTURER MODEL NUMBER	REMARKS
		OA CFM	TSP (IN WC)	ESP (IN WC)	FAN BHP	FAN HP	CAPACITY (MBH)	GPM	EAT (DB °F)	LAT (DB °F)	EWT (DB °F)	LWT (DB °F)	% GLYCOL	WPD (FT)	FLA	MOP	V	PH	HZ			
7MUA–1	SOLID HANDLING BLDG. 1ST FLOOR	4,000	1.71	1.4	3.29	5	372.7	32.6	7	83	180	160	40% P.G.	13	7.6	20	480	3	60	–	GREENHECK LFC–85–FC–50	1 2 3 4 5 6

1 BASE RAILS 2 FACTORY MOUNTED DISCONNECT 3 SINGLE POINT POWER CONNECTION 4 VFD RATED MOTOR 5 INSTALLED INDOORS 6 AIR FLOW STATION

PREPARED BY

BETA
www.BETA-Inc.com

REGISTERED PROFESSIONAL

COMMONWEALTH OF MASSACHUSETTS
RICHARD H. BROWN
MECHANICAL
No. 45505
REGISTERED PROFESSIONAL ENGINEER

SUBCONSULTANT

SAR ENGINEERING, INC.
Mechanical/Electrical Engineers
150 Grossman Drive, Suite 309
Braintree, Massachusetts 02184
617 328-9215
web: www.sar.com

PROJECT

Taunton Wastewater Treatment Facility Improvements Phase 1

Taunton, MA

TITLE

Hvac Schedules

NO.	REVISIONS	DATE

DRAWN BY:	RLB
DESIGNED BY:	RHB
CHECKED BY:	RHB
ISSUE DATE:	7/2/21
BETA JOB NO.:	6050

SCALE

NONE

UNLESS OTHERWISE NOTED OR CHANGED BY REPRODUCTION

SHEET NO.

H-0.2

6/30/2021 9:58 AM W:\T-PROJECTS\T-18009.00 - TAUNTON WWTF UPGRADES\HVAC DEPARTMENT\PHASE 1\18009.00 HVAC LEGEND SCHEDULE AND DETAILS-PHASE 1.DWG (BETA STB BW.STB)

BOILER SCHEDULE (B)

TAG NO.	BUILDING	OUTPUT CAPACITY (NET IBR) MBH	FIRING RATE OIL (GPH)	EFFICIENCY COMBUSTION	EFFICIENCY THERMAL	OPERATING PRESSURE (PSIG)	WATER EWT (°F)	WATER LWT (°F)	WATER GPM	WATER % GLYCOL	WATER WPD (FT)	ELECTRICAL DATA MCA	ELECTRICAL DATA V	ELECTRICAL DATA PH	ELECTRICAL DATA HZ	WEIGHT (LBS)	MANUFACTURER MODEL NUMBER	REMARKS
7B-1	SLUDGE HANDLING	2506	20.7	88.4	88.4	–	180	160	300	40% P.G.	–	2	208	1	60	–	BURHAM MPC15	POWER FLAME C3-O
9B-1	ADMIN BUILDING	2020	19.2	88.4	88.4	–	180	160	250	40% P.G.	–	2	208	1	60	–	BURHAM MPC15	POWER FLAME C3-O

PUMP SCHEDULE (P)

TAG NO.	BUILDING	SYSTEM SERVED	TYPE	GPM	HEAD (FT.)	GLYCOL	FLUID TEMP °F	RPM	ELECTRICAL DATA MOTOR HP	ELECTRICAL DATA V	ELECTRICAL DATA PH	ELECTRICAL DATA HZ	MANUFACTURER MODEL NUMBER	REMARKS
7HWP-1	SLUDGE HANDLING	H.W.	END	300	60	40% P.G.	180	1725	7.5	480	3	60	TACO 2510C	1
7HWP-2	SLUDGE HANDLING	H.W.	END	300	60	40% P.G.	180	1725	7.5	480	3	60	TACO 2510C	1
9HWP-1	ADMIN BUILDING	H.W.	END	300	50	40% P.G.	180	1725	7.5	480	3	60	TACO 2510C	1
9HWP-2	ADMIN BUILDING	H.W.	END	300	50	40% P.G.	180	1725	7.5	480	3	60	TACO 2510C	1

1 VFD RATED MOTOR

HOT WATER FIN-TUBE RADIATION SCHEDULE (FTR-1 LENGTH GPM)

TAG NO.	BTU PER FT	AVG. WATER TEMP	GPM PER LENGTH	% GLYCOL	PIPE SIZE (IN)	PIPE MTRL	FIN SIZE W X H	ENCLOSURE H	ENCLOSURE W	MOUNTING HEIGHT	FINS PER FOOT	FIN MTRL	ROWS	MANUFACTURER MODEL NUMBER	REMARKS
FTR-A	663	160	4.0	40 P.G.	3/4"	COPPER	4 1/4" X 4 1/4"	N/A	N/A	REFER TO ARCH.	48	ALUM.	1	RITTLING MODEL 3/4C-4JX4J-48	BARE ELEMENT GRILL BY OTHERS
FTR-B	663	160	4.0	40 P.G.	3/4"	COPPER	4 1/4" X 4 1/4"	14"	5 3/8"	REFER TO ARCH.	48	ALUM.	1	RITTLING MODEL 3/4C-4JX4J-48	ARCHITECTURAL GRILL 14 GAUGE COVER
FTR-C	663	160	4.0	40 P.G.	3/4"	COPPER	4 1/4" X 4 1/4"	14"	5 3/8"	REFER TO ARCH.	48	ALUM.	1	RITTLING MODEL 3/4C-4JX4J-48	ARCHITECTURAL GRILL 14 GAUGE COVER

1. ARCH ENCLOSURE SLOP TOP.
2. ALUMINUM ENCLOSURE PER SPECIFICATIONS

EXPANSION TANK SCHEDULE (ET)

TAG NO.	BUILDING	SERVICE	SYS TEMP (°F) MIN	SYS TEMP (°F) MAX	SYS PRESS (PSIG) MIN	SYS PRESS (PSIG) MAX	TANK ACCEPTANCE VOLUME (GAL)	TANK AIR CHARGE (PSIG)	MANUFACTURER MODEL NUMBER	REMARKS
7ET-1	SLUDGE HANDLING	H.W.	50	180	15	150	61	12	TACO CBX-425	–
9ET-1	ADMIN BUILDING	–	40	75	15	150	43	40	TACO CBX-300	–

VRF HEAT PUMP (OUTDOOR UNIT) SCHEDULE

ACCU. OUTDOOR UNIT TAG	BUILDING	MFG'R. & MODEL NO.	HEAT MBH	COOL MBH	ELEC. V/PH/HZ	No. OF ELEC. FEEDERS	MCA	MOP	MIN. EER STRETCH	MIN. COP IECC	REMARKS
9ACCU-1	ADMIN BUILDING	DAIKIN REYQ240XAYDA	270.0	240.0	480/3/60	2	21.1 + 21.1	25 + 25	–	–	

VRF (INDOOR UNIT) SCHEDULE

HP FAN COIL UNIT TAG	AREA SERVED	MFG'R. & MODEL NO.	TYPE UNIT	HEAT MBH	COOL MBH	CFM	ELEC. V/PH/HZ	MCA	MOP	BYPASS BOX	OUTDOOR UNIT	REMARKS
9HP-1	911 CONTROL RM.	DAIKIN FXFQ48TVJU	CEILING CASSETTE	53.9	48.01	1,218	208/1/60	1.8	15	BS-1-1	ACCU-2	–
9HP-2	914 CORRIDOR	DAIKIN FXSQ24TAVJU	DUCTED	26.95	23.98	742	208/1/60	1.8	15	BS-1-1	ACCU-2	–
9HP-3	915 BREAK RM.	DAIKIN FXFQ48TVJU	CEILING CASSETTE	48.01	48.01	1,218	208/1/60	1.8	15	BS-1-1	ACCU-2	–
9HP-4	916 CHEM LAB	DAIKIN FXFQ24TVJU	CEILING CASSETTE	26.98	23.98	777	208/1/60	0.7	15	BS-1-1	ACCU-2	–
9HP-5	919 CORRIDOR	DAIKIN FXSQ24TAVJU	DUCTED	26.65	23.98	742	208/1/60	1.8	15	BS-1-2	ACCU-2	–
9HP-6	921 BACTERIOLOGY	DAIKIN FXZQ15TAVJU	CEILING CASSETTE	17.05	15.01	405	208/1/60	0.4	15	BS-1-2	ACCU-2	–
9HP-7	922 OFFICE	DAIKIN FXZQ12TAVJU	CEILING CASSETTE	13.64	11.94	353	208/1/60	0.4	15	BS-1-2	ACCU-2	–
9HP-8	924 FIRST AID	DAIKIN FXZQ09TAVJU	CEILING CASSETTE	10.57	9.55	317	208/1/60	0.3	15	BS-1-2	ACCU-2	–
9HP-9	925 WAITING	DAIKIN FXSQ30TAVJU	DUCTED	34.12	29.99	812	208/1/60	1.8	15	BS-1-3	ACCU-2	–
9HP-10	928 OFFICE	DAIKIN FXZQ15TAVJU	CEILING CASSETTE	17.05	15.01	405	208/1/60	0.4	15	BS-1-3	ACCU-2	–
9HP-11	929 CONFERENCE	DAIKIN FXFQ36TVJU	CEILING CASSETTE	39.98	36.0	1,165	208/1/60	1.5	15	BS-1-3	ACCU-2	–
9HP-12	935 IND. WASTE OFFICE	DAIKIN FXFQ24TVJU	CEILING CASSETTE	26.89	23.98	777	208/1/60	0.7	15	BS-1-3	ACCU-2	–
9HP-13	934 PLANT SUPER	DAIKIN FXFQ36TVJU	CEILING CASSETTE	39.98	36.0	1,165	208/1/60	1.5	15	BS-1-3	ACCU-2	–
9HP-14	LOWER LEVEL LOCKER RMS.	DAIKIN FXSQ24TAVJU	DUCTED	26.95	23.98	600	208/1/60	1.8	15	BS-1-4	ACCU-2	–

VRF BRANCH SELECTOR SCHEDULE

BS BRANCH SELECTOR BOX TAG	MFG'R. & MODEL NO.	PORTS	ELEC. V/PH/HZ	MCA	MOP	OUTDOOR UNIT	REMARKS
9BS-1-1	DAIKIN BS4Q54TVJ	4	208/1/60	0.4	15	ACCU-1	–
9BS-1-2	DAIKIN BS4Q54TVJ	4	208/1/60	0.4	15	ACCU-1	–
9BS-1-3	DAIKIN BS8Q54TVJ	8	208/1/60	0.4	15	ACCU-1	–
9BS-1-4	DAIKIN BS4Q54TVJ	4	208/1/60	0.4	15	ACCU-1	–

PREPARED BY

BETA
www.BETA-Inc.com

REGISTERED PROFESSIONAL

COMMONWEALTH OF MASSACHUSETTS
RICHARD H. BROWN
MECHANICAL
No. 45505
REGISTERED PROFESSIONAL ENGINEER

SUBCONSULTANT

SAR ENGINEERING, INC.
Mechanical/Electrical Engineers
150 Grossman Drive, Suite 309
Braintree, Massachusetts 02184
617 328-9215
web: www.sar.com

PROJECT

Taunton Wastewater Treatment Facility Improvements Phase 1

Taunton, MA

TITLE

Hvac Schedules

NO.	REVISIONS	DATE

DRAWN BY:	RLB
DESIGNED BY:	RHB
CHECKED BY:	RHB
ISSUE DATE:	7/2/21
BETA JOB NO.:	6050

SCALE

NONE

UNLESS OTHERWISE NOTED OR CHANGED BY REPRODUCTION

SHEET NO.

H-0.3

6/30/2021 9:58 AM W:\T-PROJECTS\T-18009.00 - TAUNTON WWTF UPGRADES\HVAC DEPARTMENT\PHASE 1\18009.00 HVAC LEGEND SCHEDULE AND DETAILS-PHASE 1.DWG (BETA STB BW.STB)

HOT WATER UNIT HEATER HEATER SCHEDULE

TAG NO.	SERVICE	CFM	MBH	WATER SIDE					ELECTRICAL DATA					MANUFACTURER MODEL NUMBER	REMARKS
				GPM	% GLYCOL	WPD (FT)	EWT (°F)	LWT (°F)	HP	FLA	V	PH	HZ		
2UH-1	PIPE GALLERY BUILDING	1,340	43.7	4.4	40 P.G.	0.4	180	160	1/10	1.30	120	1	60	RITTLING MODEL RH-86	–
2UH-2	PIPE GALLERY BUILDING	730	23.9	2.4	40 P.G.	0.1	180	160	1/15	0.72	120	1	60	RITTLING MODEL RH-47	–
2UH-3	PIPE GALLERY BUILDING	1,120	32.8	3.3	40 P.G.	0.2	180	160	1/10	0.70	120	1	60	RITTLING MODEL RH-63	–
2UH-4	PIPE GALLERY BUILDING	1,120	32.8	3.3	40 P.G.	0.2	180	160	1/10	0.70	120	1	60	RITTLING MODEL RH-63	–
2UH-5	PIPE GALLERY BUILDING	1,120	32.8	3.3	40 P.G.	0.2	180	160	1/10	0.70	120	1	60	RITTLING MODEL RH-63	–
2UH-6	PIPE GALLERY BUILDING	1,120	32.8	3.3	40 P.G.	0.2	180	160	1/10	0.70	120	1	60	RITTLING MODEL RH-63	–
2UH-7	PIPE GALLERY BUILDING	1,120	32.8	3.3	40 P.G.	0.2	180	160	1/10	0.70	120	1	60	RITTLING MODEL RH-63	–
2UH-8	PIPE GALLERY BUILDING	1,120	32.8	3.3	40 P.G.	0.2	180	160	1/10	0.70	120	1	60	RITTLING MODEL RH-63	–
2UH-9	PIPE GALLERY BUILDING	1,340	43.7	4.4	40 P.G.	0.4	180	160	1/10	1.30	120	1	60	RITTLING MODEL RH-86	–
2UH-10	PIPE GALLERY BUILDING	1,340	43.7	4.4	40 P.G.	0.4	180	160	1/10	1.30	120	1	60	RITTLING MODEL RH-86	–
7UH-1	SOLID HANDLING BLDG. 1ST FLOOR	1,120	32.8	3.3	40 P.G.	0.2	180	160	1/10	0.70	120	1	60	RITTLING MODEL RH-63	–
7UH-2	SOLID HANDLING BLDG. 1ST FLOOR	730	23.9	2.4	40 P.G.	0.1	180	160	1/15	0.72	120	1	60	RITTLING MODEL RH-47	–
7UH-3	SOLID HANDLING BLDG. 1ST FLOOR	630	17.3	1.7	40 P.G.	0.1	180	160	1/15	0.72	120	1	60	RITTLING MODEL RH-33	–
7UH-4	SOLID HANDLING BLDG. 1ST FLOOR	630	17.3	1.7	40 P.G.	0.1	180	160	1/15	0.72	120	1	60	RITTLING MODEL RH-33	–
7UH-5	SOLID HANDLING BLDG. 1ST FLOOR	1,550	57.2	5.7	40 P.G.	0.4	180	160	1/8	1.58	120	1	60	RITTLING MODEL RH-108	–
7UH-6	SOLID HANDLING BLDG. 1ST FLOOR	1,550	57.2	5.7	40 P.G.	0.4	180	160	1/8	1.58	120	1	60	RITTLING MODEL RH-108	–
7UH-7	SOLID HANDLING BLDG. 1ST FLOOR	1,550	57.2	5.7	40 P.G.	0.4	180	160	1/8	1.58	120	1	60	RITTLING MODEL RH-108	–
7UH-8	SOLID HANDLING BLDG. 2ND FLOOR	630	17.3	1.7	40 P.G.	0.1	180	160	1/15	0.72	120	1	60	RITTLING MODEL RH-33	–
7UH-9	SOLID HANDLING BLDG. 2ND FLOOR	1,340	43.7	4.4	40 P.G.	0.4	180	160	1/10	1.30	120	1	60	RITTLING MODEL RH-86	–
7UH-10	SOLID HANDLING BLDG. 2ND FLOOR	1,550	57.2	5.7	40 P.G.	0.4	180	160	1/8	1.58	120	1	60	RITTLING MODEL RH-108	–
7UH-11	SOLID HANDLING BLDG. 2ND FLOOR	1,550	57.2	5.7	40 P.G.	0.4	180	160	1/8	1.58	120	1	60	RITTLING MODEL RH-108	–
7UH-12	SOLID HANDLING BLDG. 2ND FLOOR	1,550	57.2	5.7	40 P.G.	0.4	180	160	1/8	1.58	120	1	60	RITTLING MODEL RH-108	–
7UH-13	SOLID HANDLING BLDG. 2ND FLOOR	1,550	57.2	5.7	40 P.G.	0.4	180	160	1/8	1.58	120	1	60	RITTLING MODEL RH-108	–
7UH-14	SOLID HANDLING BLDG. 2ND FLOOR	1,120	32.8	3.3	40 P.G.	0.2	180	160	1/10	0.70	120	1	60	RITTLING MODEL RH-63	–
7UH-15	SOLID HANDLING BLDG. 2ND FLOOR	450	12.2	1.2	40 P.G.	0.4	180	160	1/30	0.70	120	1	60	RITTLING MODEL RH-24	–
7UH-16	SOLID HANDLING BLDG. 2ND FLOOR	1,120	32.8	3.3	40 P.G.	0.2	180	160	1/10	0.70	120	1	60	RITTLING MODEL RH-63	–
7UH-17	SOLID HANDLING BLDG. 1ST FLOOR	450	12.2	1.2	40 P.G.	0.4	180	160	1/30	0.70	120	1	60	RITTLING MODEL RH-24	–
7UH-18	SOLID HANDLING BLDG. 1ST FLOOR	450	12.2	1.2	40 P.G.	0.4	180	160	1/30	0.70	120	1	60	RITTLING MODEL RH-24	–

CABINET UNIT HEATER SCHEDULE

TAG NO.	SERVICE	CFM	MBH	WATER SIDE					ELECTRICAL DATA				MANUFACTURER MODEL NUMBER	REMARKS
				GPM	% GLYCOL	WPD (FT)	EWT (°F)	LWT (°F)	HP	V	PH	HZ		
7CUH-1	SOLID HANDLING BLDG. 1ST FLOOR	300	12.5	1.5	40 P.G.	0.4	130	113.2	1/60	120	1	60	RITTLING MODEL RFRC-420	2 ROW COIL
9CUH-1	ADMIN BUILDING	300	12.5	1.5	40 P.G.	0.4	130	113.2	1/60	120	1	60	RITTLING MODEL RF-220	FLOOR MOUNTED 2 ROW COIL
9CUH-2	ADMIN BUILDING	300	12.5	1.5	40 P.G.	0.4	130	113.2	1/60	120	1	60	RITTLING MODEL RF-220	FLOOR MOUNTED 2 ROW COIL
9CUH-3	ADMIN BUILDING	300	12.5	1.5	40 P.G.	0.4	130	113.2	1/60	120	1	60	RITTLING MODEL RF-220	FLOOR MOUNTED 2 ROW COIL

CONVECTOR SCHEDULE

TAG NO.	LOCATION	TOTAL MBH	EAT °F	WATER				CABINET			MANUFACTURER MODEL NUMBER	REMARKS
				GPM	% GLYCOL	EWT (°F)	LWT (°F)	LENGTH	HEIGHT	DEPTH		
9C-1	SEE PLANS	4.8	65	0.6	40 P.G.	130	100	40	32	6	RITTLING MODEL SL	WALL

ELECTRIC UNIT HEATER SCHEDULE

TAG NO.	BUILDING	CAPACITY	FAN DATA				MANUFACTURER MODEL NUMBER	REMARKS
		KW	CFM	V	PH	HZ		
1EUH-1	HEADWORKS BUILDING	20	2,330	480	3	60	QMARK GUX20004832	EXPLOSION PROOF
1EUH-2	HEADWORKS BUILDING	20	2,330	480	3	60	QMARK GUX20004832	EXPLOSION PROOF
1EUH-3	HEADWORKS BUILDING	20	2,330	480	3	60	QMARK GUX20004832	EXPLOSION PROOF
1EUH-4	HEADWORKS BUILDING	20	2,330	480	3	60	QMARK GUX20004832	EXPLOSION PROOF
5EUH-1	CHEMICAL HANDLING BUILDING	12.5	480	480	3	60	QMARK QWD12432	– –
5EUH-2	CHEMICAL HANDLING BUILDING	3.0	480	480	3	60	QMARK QWD03432	– –

DIFFUSER, REGISTER & GRILLE SCHEDULE

TAG NO.	MODULE SIZE (IN)	ROUND APAPTER SIZE (IN)	FLEX DUCT SIZE (IN)	SQUARE DUCT SIZE (IN)	SERVICE	CFM RANGE		MAX. NC LEVEL	MANUFACTURER & MODEL NO.	REMARKS
						MIN	MAX			
SD-1	12x12	6"	6"	N/A	SUPPLY	60	120	22	NAILOR RNS3	
SD-2	24x24	6"	6"	N/A	SUPPLY	60	120	22	NAILOR RNS3	
SD-3	24x24	8"	8"	N/A	SUPPLY	125	210	22	NAILOR RNS3	
SD-4	24x24	10"	10"	N/A	SUPPLY	215	325	22	NAILOR RNS3	
SD-5	24x24	12"	12"	N/A	SUPPLY	330	500	22	NAILOR RNS3	
SD-6	24x24	15"	15"	N/A	SUPPLY	500	740	22	NAILOR RNS3	
SR-1	20x12	N/A	N/A	N/A	SUPPLY	500	1800	40	NAILOR 45DL	
SR-2	30x12	N/A	N/A	N/A	SUPPLY	1800	2400	40	NAILOR 45DL	
SR-3	50x12	N/A	N/A	N/A	SUPPLY	2500	3810	40	NAILOR 45DL	
SR-4	70x12	N/A	N/A	N/A	SUPPLY	3800	5000	40	NAILOR 45DL	
SR-5	6x6	N/A	N/A	N/A	SUPPLY	50	140	25	NAILOR 61DH	
SR-6	10x6	N/A	N/A	N/A	SUPPLY	140	245	25	NAILOR 61DH	
SR-7	14x6	N/A	N/A	N/A	SUPPLY	245	400	25	NAILOR 61DH	
SR-8	18x10	N/A	N/A	N/A	SUPPLY	400	790	25	NAILOR 61DH	
SR-9	20x12	N/A	N/A	N/A	SUPPLY	500	1800	40	NAILOR 45DL-0	
SR-10	30x12	N/A	N/A	N/A	SUPPLY	1800	2400	40	NAILOR 45DL-0	
SR-11	50x12	N/A	N/A	N/A	SUPPLY	2500	3810	40	NAILOR 45DL-0	
SR-12	70x12	N/A	N/A	N/A	SUPPLY	3800	5000	40	NAILOR 45DL-0	
ER-1	18x12	N/A	N/A	N/A	EXHAUST	500	1000	40	NAILOR 6755H-HD	
ER-2	30x12	N/A	N/A	N/A	EXHAUST	1000	1600	40	NAILOR 6755H-HD	
ER-3	42x12	N/A	N/A	N/A	EXHAUST	1600	2500	40	NAILOR 6755H-HD	
ER-4	50x12	N/A	N/A	N/A	EXHAUST	2500	3200	40	NAILOR 6755H-HD	
ER-5	50x18	N/A	N/A	N/A	EXHAUST	3200	4800	40	NAILOR 6755H-HD	
ER-6	36x18	N/A	N/A	N/A	EXHAUST	1600	2500	40	NAILOR 6755H-HD	
ER-7	30x24	N/A	N/A	N/A	EXHAUST	2500	2800	40	NAILOR 6755H-HD	
ER-8	42x30	N/A	N/A	N/A	EXHAUST	2800	4400	40	NAILOR 6755H-HD	
ER-9	6x6	N/A	N/A	N/A	EXHAUST	50	140	25	NAILOR 6145H	
ER-10	10x6	N/A	N/A	N/A	EXHAUST	140	245	25	NAILOR 6145H	
ER-11	14x6	N/A	N/A	N/A	EXHAUST	245	400	25	NAILOR 6145H	
ER-12	18x10	N/A	N/A	N/A	EXHAUST	400	790	25	NAILOR 6145H	
ER-13	18x12	N/A	N/A	N/A	EXHAUST	500	1000	40	NAILOR 6755H-HD	
ER-14	30x12	N/A	N/A	N/A	EXHAUST	1000	1600	40	NAILOR 6755H-HD	
ER-15	36x18	N/A	N/A	N/A	EXHAUST	1600	2500	40	NAILOR 6755H-HD	
ER-16	30x24	N/A	N/A	N/A	EXHAUST	2500	2800	40	NAILOR 6755H-HD	
ER-17	42x30	N/A	N/A	N/A	EXHAUST	2800	4400	40	NAILOR 6755H-HD	
EG-1	12x12	6"	6"	N/A	EXHAUST	60	120	22	NAILOR 6145H	
EG-2	12x12	8"	8"	N/A	EXHAUST	125	210	22	NAILOR 6145H	
EG-3	24x24	10"	10"	N/A	EXHAUST	215	325	22	NAILOR 6145H	
EG-4	24x24	12"	12"	N/A	EXHAUST	330	500	22	NAILOR 6145H	
RR-1	24x24	N/A	N/A	22x22	RETURN	500	1900	22	NAILOR 6145H	

PREPARED BY

BETA
www.BETA-Inc.com

REGISTERED PROFESSIONAL

COMMONWEALTH OF MASSACHUSETTS
RICHARD H. BROWN
MECHANICAL
NO. 45505
REGISTERED PROFESSIONAL ENGINEER

SUBCONSULTANT

SAR ENGINEERING, INC.
Mechanical/Electrical Engineers
150 Grossman Drive, Suite 309
Braintree, Massachusetts 02184
617 328-9215
web: www.sar.com

PROJECT

Taunton Wastewater Treatment Facility Improvements Phase 1

Taunton, MA

TITLE

Hvac Schedules

NO.	REVISIONS	DATE

DRAWN BY:	RLB
DESIGNED BY:	RHB
CHECKED BY:	RHB
ISSUE DATE:	7/2/21
BETA JOB NO.:	6050

SCALE

NONE

UNLESS OTHERWISE NOTED OR CHANGED BY REPRODUCTION

SHEET NO.

H-0.4

6/30/2021 9:58 AM W:\T-PROJECTS\T-18009.00 - TAUNTON WWTF UPGRADES\HVAC DEPARTMENT\PHASE 1\18009.00 HVAC LEGEND SCHEDULE AND DETAILS-PHASE 1.DWG (BETA STB BW.STB)

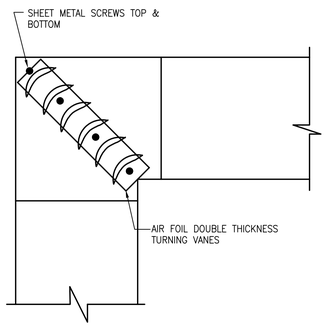

NOTE:
PROVIDE TURNING VANES IN ALL 90° DUCT ELBOWS HAVING A CENTERLINE RADIUS LESS THEN 1/2 TIMES THE DUCT WIDTH.

1 TYPICAL 90° DUCT ELBOW DETAIL
NO SCALE

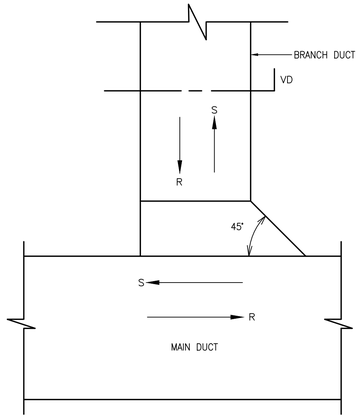

2 BRANCH DUCT CONNECTION DETAIL
NO SCALE

DIFFUSER NECK SIZE	ROUND DUCT SIZE
6"X6"	6"ø
7 1/2"X7 1/2"	7"ø
9"X9"	9"ø
10 1/2"X10 1/2"	10"ø
12"X12"	12"ø

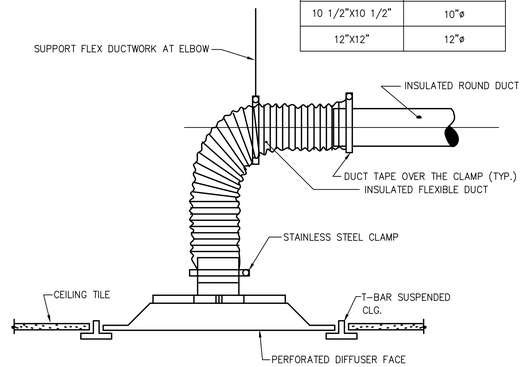

3 SUPPLY DIFFUSER CONNECTION DETAIL
NO SCALE

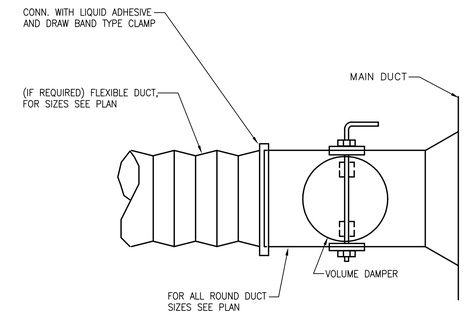

4 ROUND BRANCH DUCT TAKE-OFF DETAIL
NO SCALE

HD-017

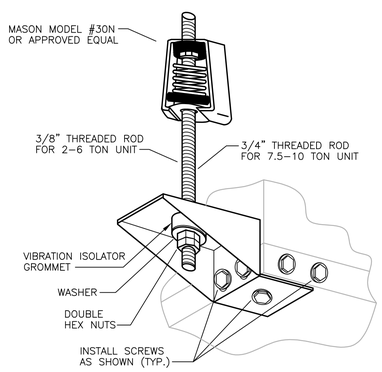

5 HORIZONTAL HEAT PUMP UNIT HANGER KIT ASSEMBLY
NO SCALE

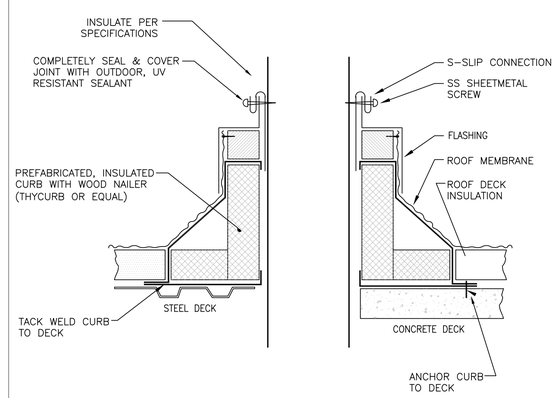

6 DUCT PENETRATION THRU ROOF DETAIL
NO SCALE

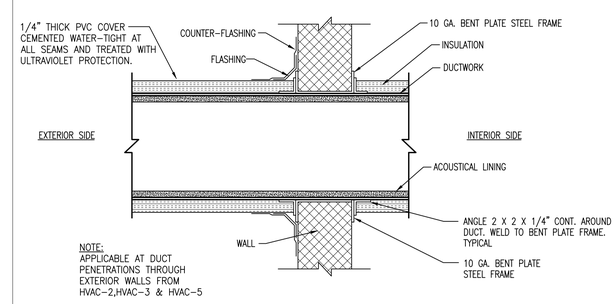

NOTE:
APPLICABLE AT DUCT PENETRATIONS THROUGH EXTERIOR WALLS FROM HVAC-2,HVAC-3 & HVAC-5

7 DUCT PENETRATION AT EXTERIOR WALL DETAIL
NO SCALE

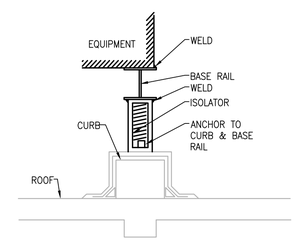

8 ACCU MOUNTING DETAIL
NO SCALE

PREPARED BY

BETA
www.BETA-Inc.com

REGISTERED PROFESSIONAL

SUBCONSULTANT

SAR ENGINEERING, INC.
Mechanical/Electrical Engineers
150 Grossman Drive, Suite 309
Braintree, Massachusetts 02184
617 328-9215
web: www.sar.com

PROJECT

Taunton Wastewater Treatment Facility Improvements Phase 1

Taunton, MA

TITLE

Hvac Details

NO.	REVISIONS	DATE

DRAWN BY:	RLB
DESIGNED BY:	RHB
CHECKED BY:	RHB
ISSUE DATE:	7/2/21
BETA JOB NO.:	6050

SCALE

NONE

UNLESS OTHERWISE NOTED OR CHANGED BY REPRODUCTION

SHEET NO.

H-0.5

6/30/2021 9:58 AM W:\T-PROJECTS\T-18009.00 - TAUNTON WWTF UPGRADES\HVAC DEPARTMENT\PHASE 1\18009.00 HVAC LEGEND SCHEDULE AND DETAILS-PHASE 1.DWG (BETA STB BW.STB)

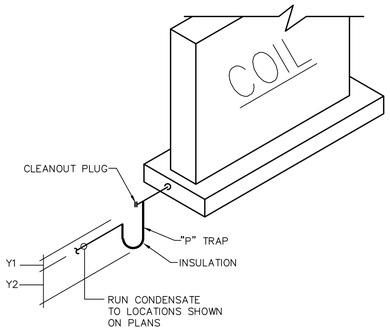

"P" TRAP HEIGHT SCHEDULE			
NEGATIVE INTERNAL SP.	Y1 MIN.	Y2 MIN.	DRAIN SIZE
1/2"	1 1/4"	2"	3/4"
1"	1 1/2"	2"	1"
2"	1 1/2"	2"	1"
4"	1 3/4"	3"	1 1/4"
6"	2"	4"	1 1/2"

9 "P" TRAP DETAIL
NO SCALE

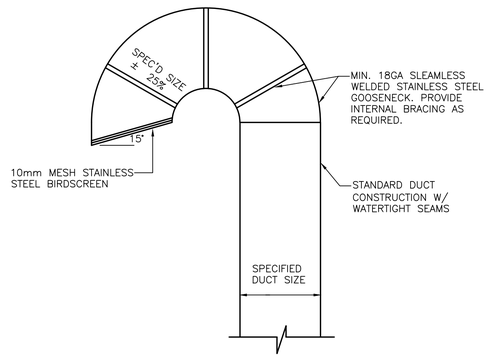

10 GOOSENECK DETAIL
NO SCALE

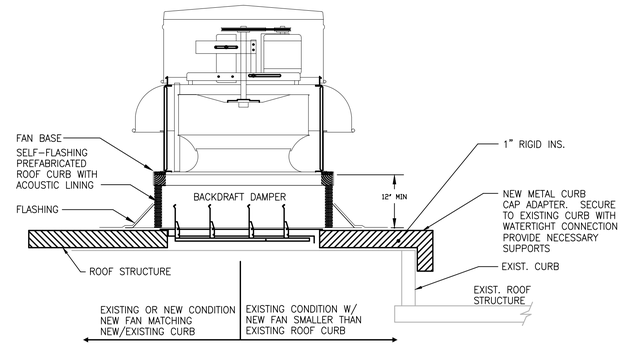

PROVIDE SHIMS FOR CURB WHERE ROOF PITCHES TO DRAIN
PROVIDE SLOPED ROOF CURB FOR SLOPED ROOF
PROVIDE BACK DRAFT DAMPERS FOR ALL ROOF FANS
CURB TYPE TO SUIT ROOF STRUCTURE (SEE ARCH. DWGS.)

11 ROOF EXHAUST FAN MOUNTED ON EXISTING CURB
NO SCALE

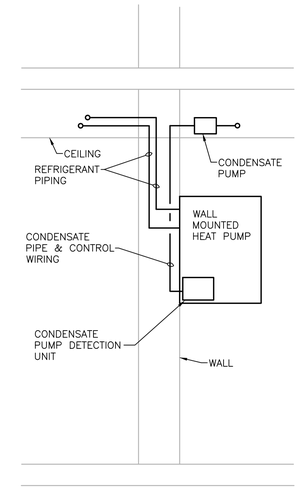

12 WALL MOUNTED HP DETAIL
NO SCALE

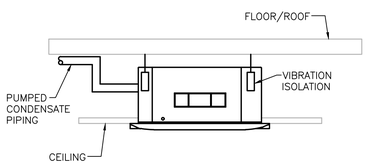

13 SPLIT-SYSTEM INDOOR UNIT (CASSETTE) INSTALLATION
NO SCALE

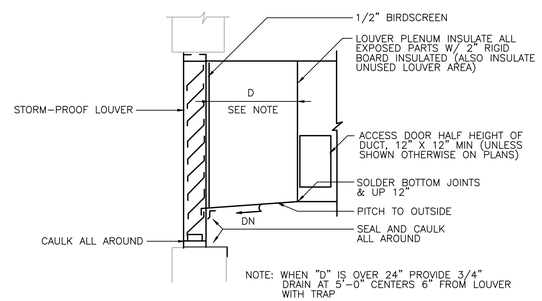

14 LOUVER CONNECTION
NO SCALE

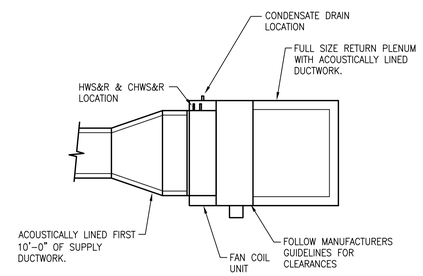

15 FAN COIL UNIT DETAIL
NO SCALE

PREPARED BY

BETA
www.BETA-Inc.com

REGISTERED PROFESSIONAL

COMMONWEALTH OF MASSACHUSETTS
ROBERT H. BROWN
MECHANICAL
NO. 45505
REGISTERED PROFESSIONAL ENGINEER

SUBCONSULTANT

SAR ENGINEERING, INC.
Mechanical/Electrical Engineers
150 Grossman Drive, Suite 309
Braintree, Massachusetts 02184
617 328-9215
web: www.sar.com

PROJECT

Taunton Wastewater Treatment Facility Improvements Phase 1

Taunton, MA

TITLE

Hvac Details

NO.	REVISIONS	DATE

DRAWN BY:	RLB
DESIGNED BY:	RHB
CHECKED BY:	RHB
ISSUE DATE:	7/2/21
BETA JOB NO.:	6050

SCALE

NONE

UNLESS OTHERWISE NOTED OR CHANGED BY REPRODUCTION

SHEET NO.

H-0.6

6/30/2021 9:59 AM W:\T-PROJECTS\T-18009.00 - TAUNTON WWTF UPGRADES\HVAC DEPARTMENT\PHASE 1\18009.00 HVAC LEGEND SCHEDULE AND DETAILS-PHASE 1.DWG (BETA STB BW.STB)

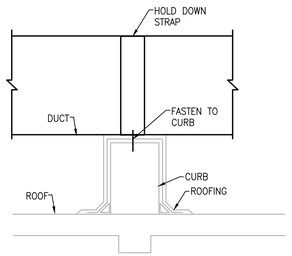

16 ROOFTOP DUCT MOUNTING DETAIL
NO SCALE

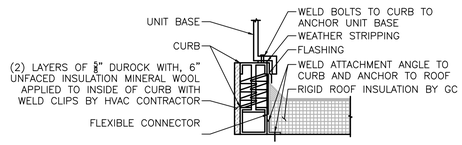

17 ERV / RTU CURB MOUNTING DETAIL
NO SCALE

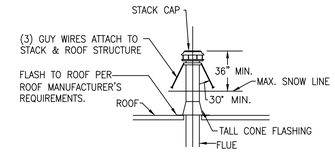

18 FLUE & INTAKE THRU ROOF DETAIL
NO SCALE

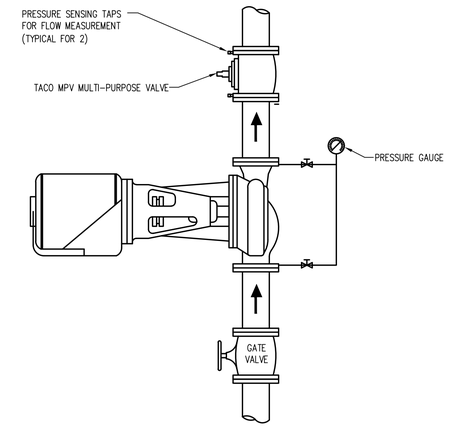

19 HORIZONTAL INLINE PUMP INSTALLATION DETAIL
NO SCALE

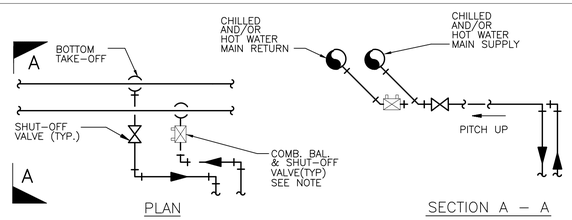

BRANCH PIPING TAKE-OFF TO UNITS OR RADIATION THAT ARE LOCATED BELOW THE MAINS

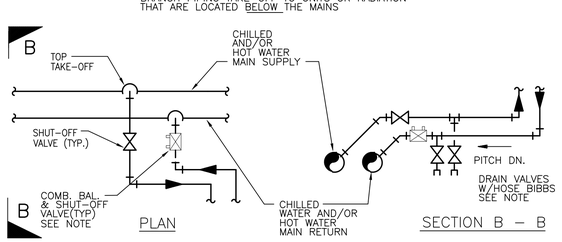

BRANCH PIPING TAKE-OFF TO UNITS OR RADIATION THAT ARE LOCATED ABOVE THE MAINS

NOTE: COMBINATION FLOW MEASURING, BALANCING AND SHUT-OFF VALVES REQUIRED ON ALL BRANCHES 1 1/2" AND LARGER. PROVIDE BALL VALVES ONLY FOR ALL BRANCHES 1 1/4" AND SMALLER. PROVIDE 3/4" DRAIN VALVES WITH HOSE BIBBS CONNECTION AS SHOWN ON ALL BRANCHES 1 1/2" AND LARGER. COMBINATION FLOW MEASURING, BALANCING AND SHUT-OFF VALVES, AND DRAIN VALVES WITH HOSE BIBBS ARE ALSO REQUIRED ON ALL BRANCHES, 2 1/2" AND LARGER FROM ALL VERTICAL RISERS. SEE SPECIFICATION SECTION 15600 FOR VALVE REQUIREMENTS.

20 TYPICAL PIIPING BRANCH TAKE-OFF DETAIL
NO SCALE

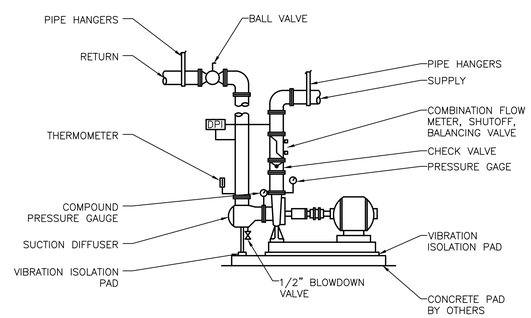

21 BASE MOUNTED PUMP PIPING DETAIL
NO SCALE

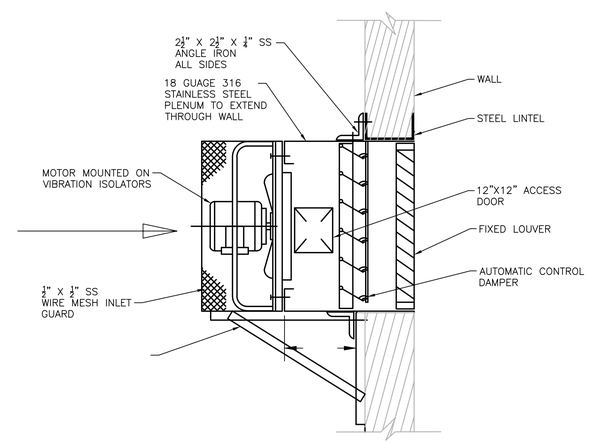

21 PROPELLER FAN DETAIL
NO SCALE

PREPARED BY

BETA
www.BETA-Inc.com

REGISTERED PROFESSIONAL

SUBCONSULTANT

SAR ENGINEERING, INC.
Mechanical/Electrical Engineers
150 Grossman Drive, Suite 309
Braintree, Massachusetts 02184
617 328-9215
web: www.sar.com

PROJECT

Taunton Wastewater Treatment Facility Improvements Phase 1

Taunton, MA

TITLE

Hvac Details

NO.	REVISIONS	DATE

DRAWN BY:	RLB
DESIGNED BY:	RHB
CHECKED BY:	RHB
ISSUE DATE:	7/2/21
BETA JOB NO.:	6050

SCALE

NONE

UNLESS OTHERWISE NOTED OR CHANGED BY REPRODUCTION

SHEET NO.

H-0.7

6/30/2021 9:59 AM W:\T-PROJECTS\T-18009.00 - TAUNTON WWTF UPGRADES\HVAC DEPARTMENT\PHASE 1\18009.00 HVAC LEGEND SCHEDULE AND DETAILS-PHASE 1.DWG (BETA STB BW.STB)

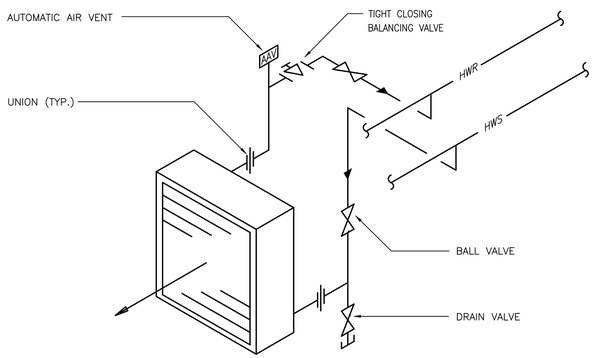

23 UNIT HEATER PIPING DETAIL
NO SCALE

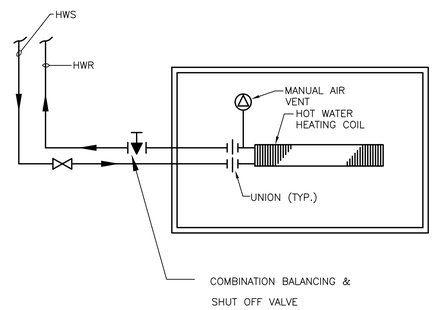

24 HORIZONTAL CABINET HEATER PIPING DETAIL
NO SCALE

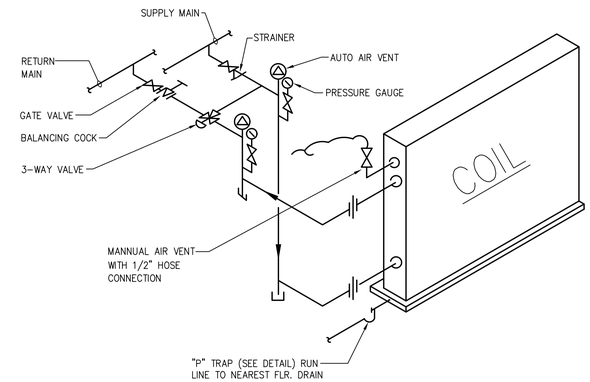

25 SINGLE COIL PIPING DETAIL
NO SCALE

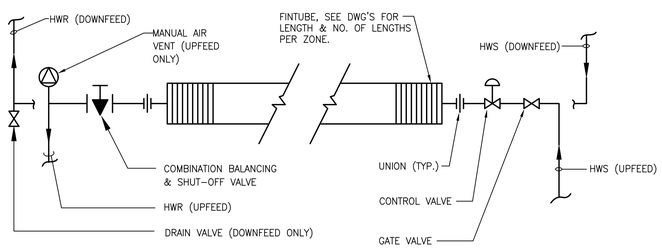

26 HOT WATER FINTUBE RADIATION ZONE PIPING DETAIL
NO SCALE

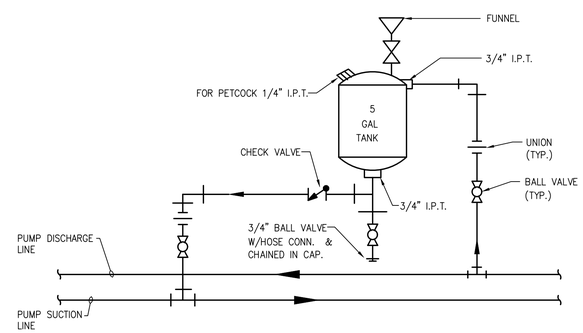

27 CHEMICAL SHOT FEEDER PIPING DETAIL
NO SCALE

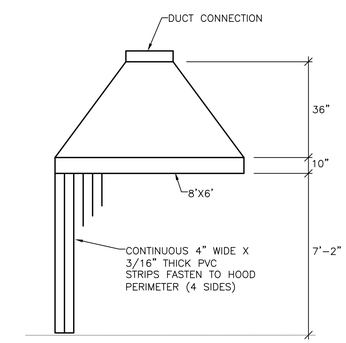

28 TYPICAL EXHAUST HOOD
NO SCALE

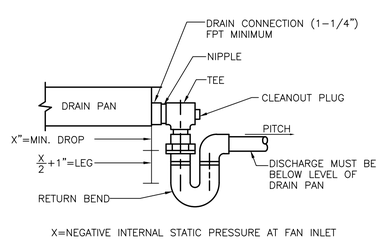

NOTES:
1. ALLOW SUFFICIENT SPACE BELOW DRAIN PAN FOR TRAP
2. PITCH DRAIN FOR PROPER RUN-OFF
3. MANUALLY, PRIME FILL TRAP BEFORE START-UP TO FORM INITIAL DRAIN SEAL
4. SUPPORT LENGTHY DRAIN LINES TO PREVENT SAG AND CONDENSATE OVERFLOW

29 DRAIN PAN WATER SEAL PIPING DETAIL
NO SCALE

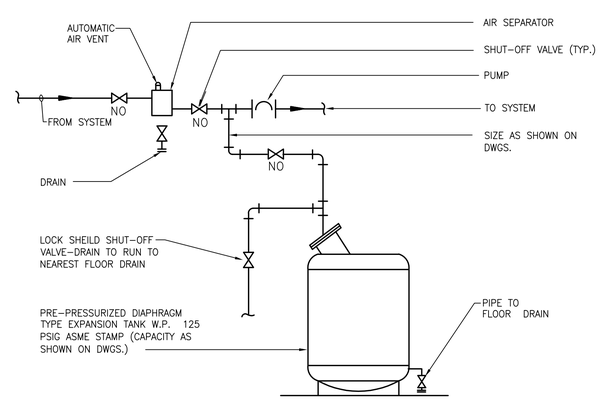

30 TYPICAL DETAIL PIPING CONNECTIONS TO EXPANSION TANKS
NO SCALE

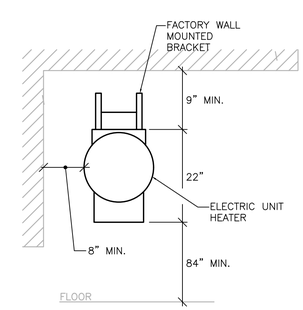

31 ELEC UNIT HEATER MOUNTING DETAIL
NO SCALE

PREPARED BY

BETA
www.BETA-Inc.com

REGISTERED PROFESSIONAL

COMMONWEALTH OF MASSACHUSETTS
ROBERT A. BROWN
MECHANICAL
NO. 45505
REGISTERED PROFESSIONAL ENGINEER

SUBCONSULTANT

SAR ENGINEERING, INC.
Mechanical/Electrical Engineers
150 Grossman Drive, Suite 309
Braintree, Massachusetts 02184
617 328-9215
web: www.sar.com

PROJECT

Taunton Wastewater Treatment Facility Improvements Phase 1

Taunton, MA

TITLE

Hvac Details

NO.	REVISIONS	DATE

DRAWN BY:	RLB
DESIGNED BY:	RHB
CHECKED BY:	RHB
ISSUE DATE:	7/2/21
BETA JOB NO.:	6050

SCALE

NONE

UNLESS OTHERWISE NOTED OR CHANGED BY REPRODUCTION

SHEET NO.

H-0.8

6/30/2021 9:59 AM W:\T-PROJECTS\T-18009.00 - TAUNTON WWTF UPGRADES\HVAC DEPARTMENT\PHASE 1\18009.00 HVAC LEGEND SCHEDULE AND DETAILS-PHASE 1.DWG (BETA STB BW.STB)

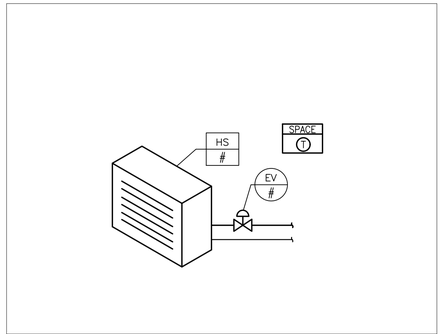

1 TYPICAL UNIT HEATER CONTROL DIAGRAM
NO SCALE

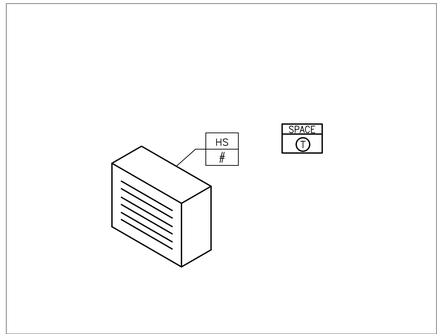

2 TYPICAL ELECTRIC CABINET & UNIT HEATER CONTROL DIAGRAM
NO SCALE

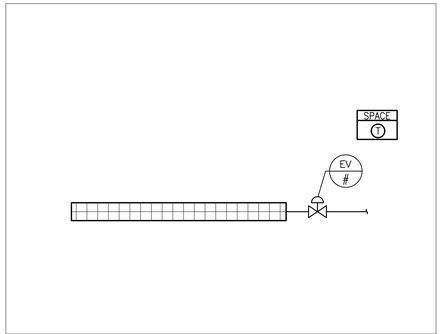

3 TYPICAL BASEBOARD HEAT CONTROL DIAGRAM
NO SCALE

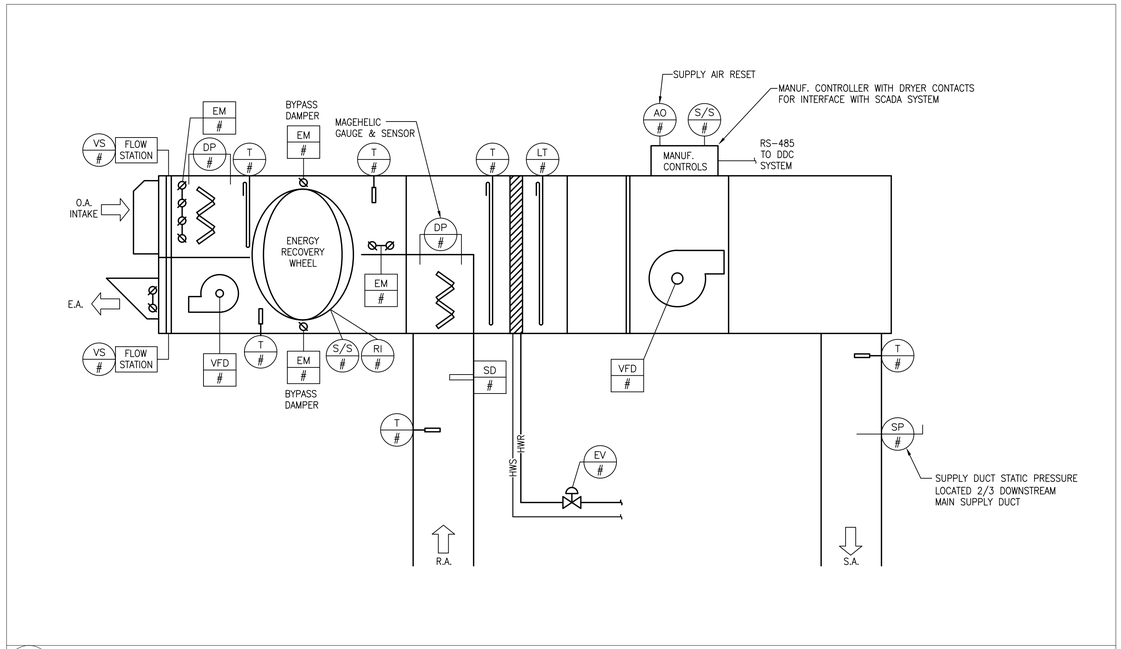

8 TYPICAL ENERGY RECOVERY UNIT CONTROL DIAGRAM
NO SCALE

CONTROLS LEGEND

- SPACE T O # — WALL MOUNTED SPACE TEMPERATURE THERMOSTAT AND/OR OCCUPANCY OVER-RIDE BUTTON
- T # — WATER TEMPERATURE SENSOR/THERMOSTAT
- FS # — DIFFERENTIAL PRESSURE FLOW SENSOR (AIR) PADDLE FLOW SENSOR (WATER)
- DP # — FILTER DIFFERENTIAL SENSOR
- VS # — VELOCITY TRANDUCER
- AO # — ANALOG OUTPUT FROM EMS
- EV # — ELECTRONIC VALVE ACTUATOR
- EM # — ELECTRONIC DAMPER MOTOR ACTUATOR
- T # — DUCT MOUNTED TEMPERATURE SENSOR/THERMOSTAT
- H # — DUCT MOUNTED RELATIVE HUMIDITY SENSOR
- LT # — DUCT MOUNTED LOW TEMP. FREEZE THERMOSTAT
- T # — DUCT MOUNTED AVERAGING THERMOSTAT
- EM # — ELECTRONIC MOTORIZED DAMPER ACTUATOR
- HOA # — HAND-AUTO-OFF STARTER
- SD # — DUCT SMOKE DETECTOR (FURNISHED BY OTHERS)
- OC # — OCCUPANCY SENSOR (COORDINATE W/ ELECTRICAL)
- AL # — ALARM (DIGITAL AND ANALOG)
- SM # — KITCHEN HOOD SMOKE SENSOR
- VS # — VELOCITY SENSOR
- CO_2 # — CO_2 SENSOR
- CO — CO SENSOR
- S/S # — START-STOP
- SC # — SPEED CONTROL
- RI # — RELAY INPUT

ASC	APPLICATION SPECIFIC CONTROLLER
BC	BUILDING CONTROLLER
CAC	CUSTOM APPLICATION CONTROLLER
DDCFP	DDC FIELD PANEL
	CONNECT NEW TO EXISTING

PREPARED BY

BETA
www.BETA-Inc.com

REGISTERED PROFESSIONAL

COMMONWEALTH OF MASSACHUSETTS
RICHARD H. BROWN
MECHANICAL
No. 45505
REGISTERED PROFESSIONAL ENGINEER

SUBCONSULTANT

SAR ENGINEERING, INC.
Mechanical/Electrical Engineers
150 Grossman Drive, Suite 309
Braintree, Massachusetts 02184
617 328-9215
web: www.sar.com

PROJECT

Taunton Wastewater Treatment Facility Improvements Phase 1

Taunton, MA

TITLE

Hvac Details

NO.	REVISIONS	DATE

DRAWN BY:	RLB
DESIGNED BY:	RHB
CHECKED BY:	RHB
ISSUE DATE:	7/2/21
BETA JOB NO.:	6050

SCALE

NONE

UNLESS OTHERWISE NOTED OR CHANGED BY REPRODUCTION

SHEET NO.

H-0.9

6/30/2021 9:59 AM W:\T-PROJECTS\T-18009.00 - TAUNTON WWTF UPGRADES\HVAC DEPARTMENT\PHASE 1\18009.00 HVAC LEGEND SCHEDULE AND DETAILS-PHASE 1.DWG (BETA STB BW.STB)

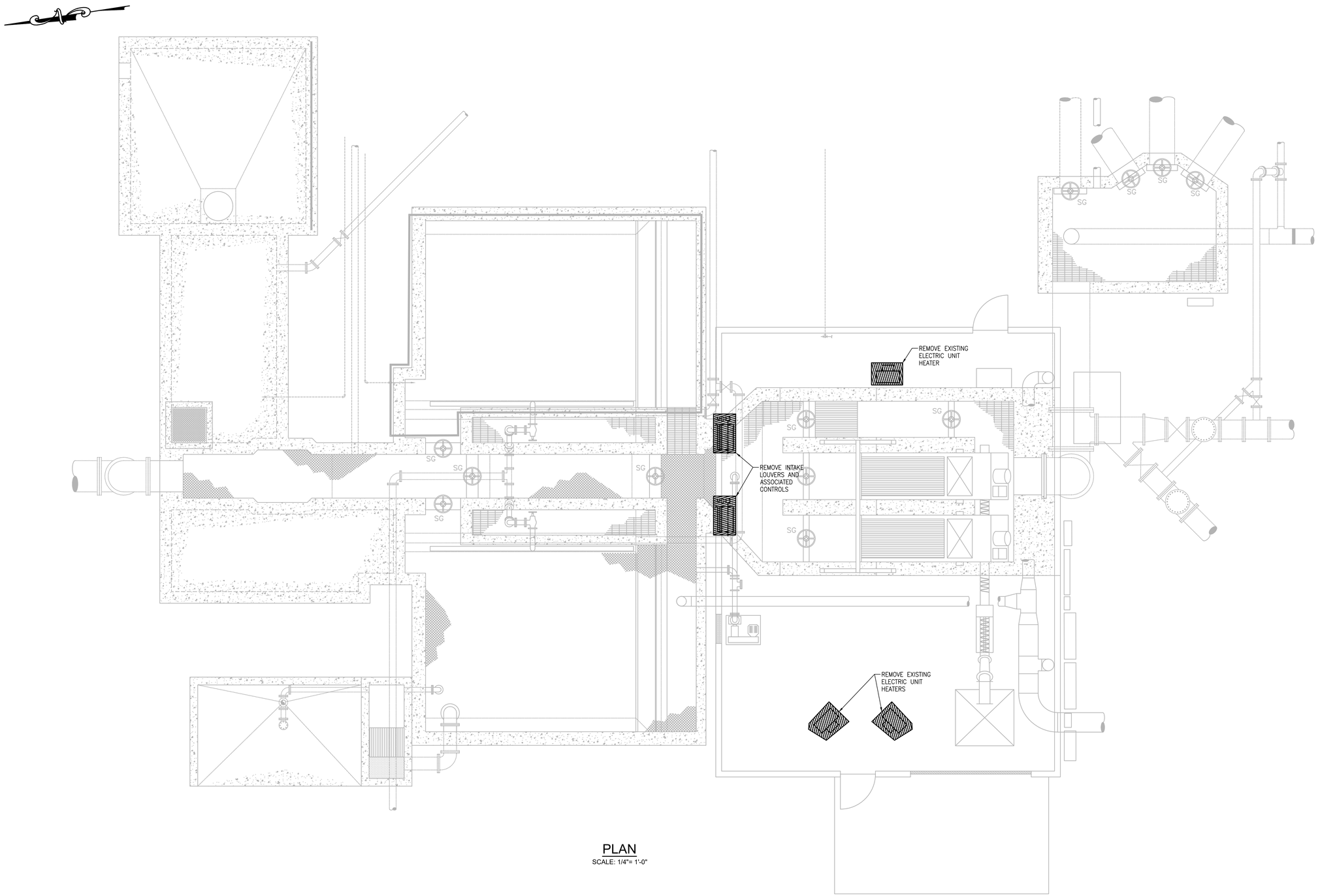

PLAN
SCALE: 1/4"= 1'-0"

PREPARED BY

BETA
www.BETA-Inc.com

REGISTERED PROFESSIONAL

COMMONWEALTH OF MASSACHUSETTS
ROBERT H. BROWN
MECHANICAL
NO. 45555
REGISTERED PROFESSIONAL ENGINEER

SUBCONSULTANT

SAR ENGINEERING, INC.
Mechanical/Electrical Engineers
150 Grossman Drive, Suite 309
Braintree, Massachusetts 02184
617 328-9215
web: www.sar.com

PROJECT

Taunton Wastewater Treatment Facility Improvements Phase 1

Taunton, MA

TITLE

Hvac Demolition Headworks Plan

NO.	REVISIONS	DATE

DRAWN BY:	RLB
DESIGNED BY:	RHB
CHECKED BY:	RHB
ISSUE DATE:	7/2/21
BETA JOB NO.:	6050

SCALE

AS SHOWN

UNLESS OTHERWISE NOTED OR CHANGED BY REPRODUCTION

SHEET NO.

H-1.1

6/30/2021 9:56 AM W:\T-PROJECTS\T-18009.00 - TAUNTON WWTF UPGRADES\HVAC DEPARTMENT\PHASE 1\18009.00 HVAC HEADWORKS-PHASE 1.DWG (BETA STB BW.STB)

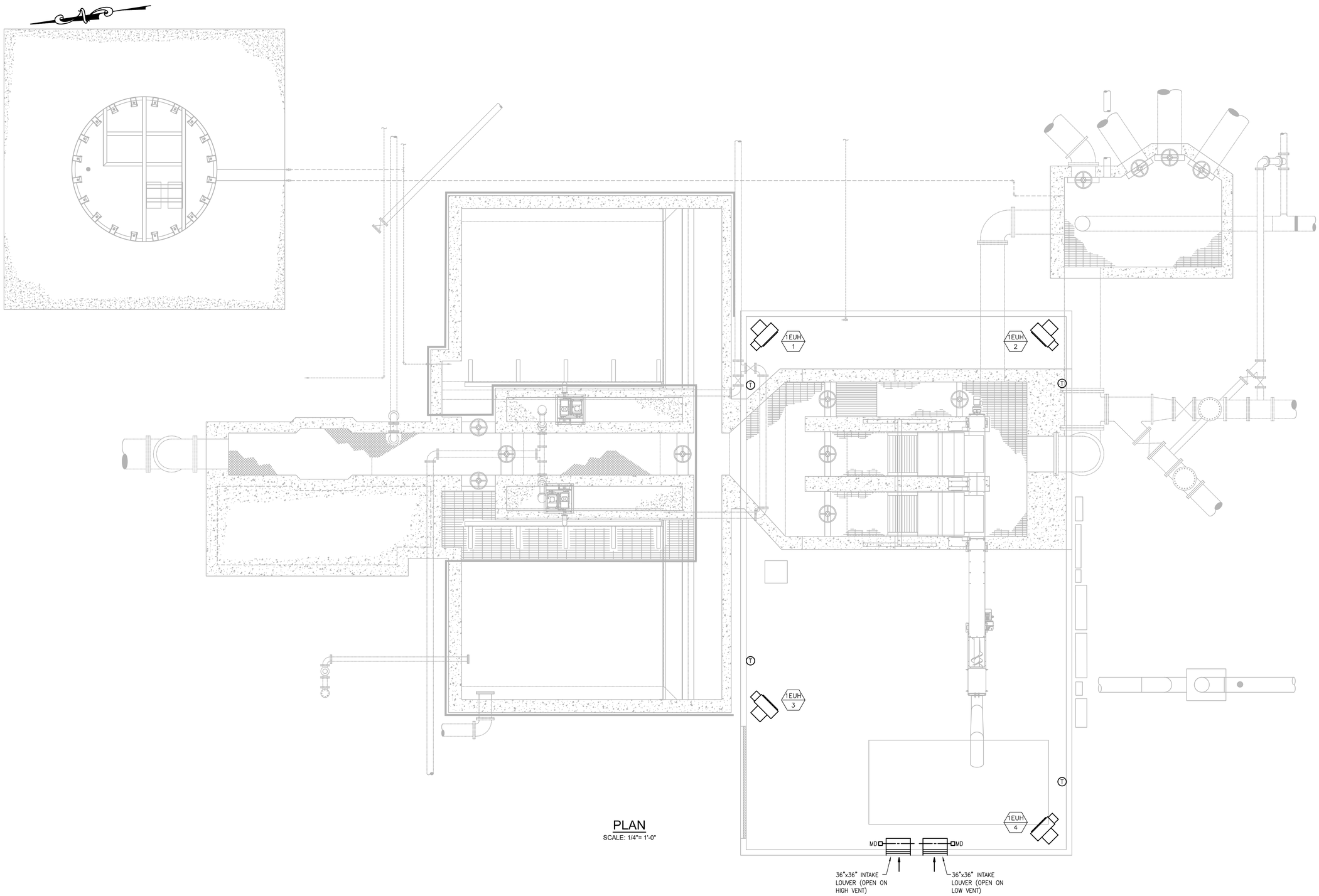

PLAN
SCALE: 1/4"= 1'-0"

PREPARED BY

BETA
www.BETA-Inc.com

REGISTERED PROFESSIONAL

COMMONWEALTH OF MASSACHUSETTS
ROBERT H. BROWN
MECHANICAL
NO. 45555
REGISTERED PROFESSIONAL ENGINEER

SUBCONSULTANT

SAR ENGINEERING, INC.
Mechanical/Electrical Engineers
150 Grossman Drive, Suite 309
Braintree, Massachusetts 02184
617 328-9215
web: www.sar.com

PROJECT

Taunton Wastewater Treatment Facility Improvements Phase 1

Taunton, MA

TITLE

Hvac Headworks Plan

NO.	REVISIONS	DATE

DRAWN BY:	RLB
DESIGNED BY:	RHB
CHECKED BY:	RHB
ISSUE DATE:	7/2/21
BETA JOB NO.:	6050

SCALE

AS SHOWN

UNLESS OTHERWISE NOTED OR CHANGED BY REPRODUCTION

SHEET NO.

H-1.2

6/30/2021 9:57 AM W:\T-PROJECTS\T-18009.00 - TAUNTON WWTF UPGRADES\HVAC DEPARTMENT\PHASE 1\18009.00 HVAC HEADWORKS-PHASE 1.DWG (BETA STB BW.STB)

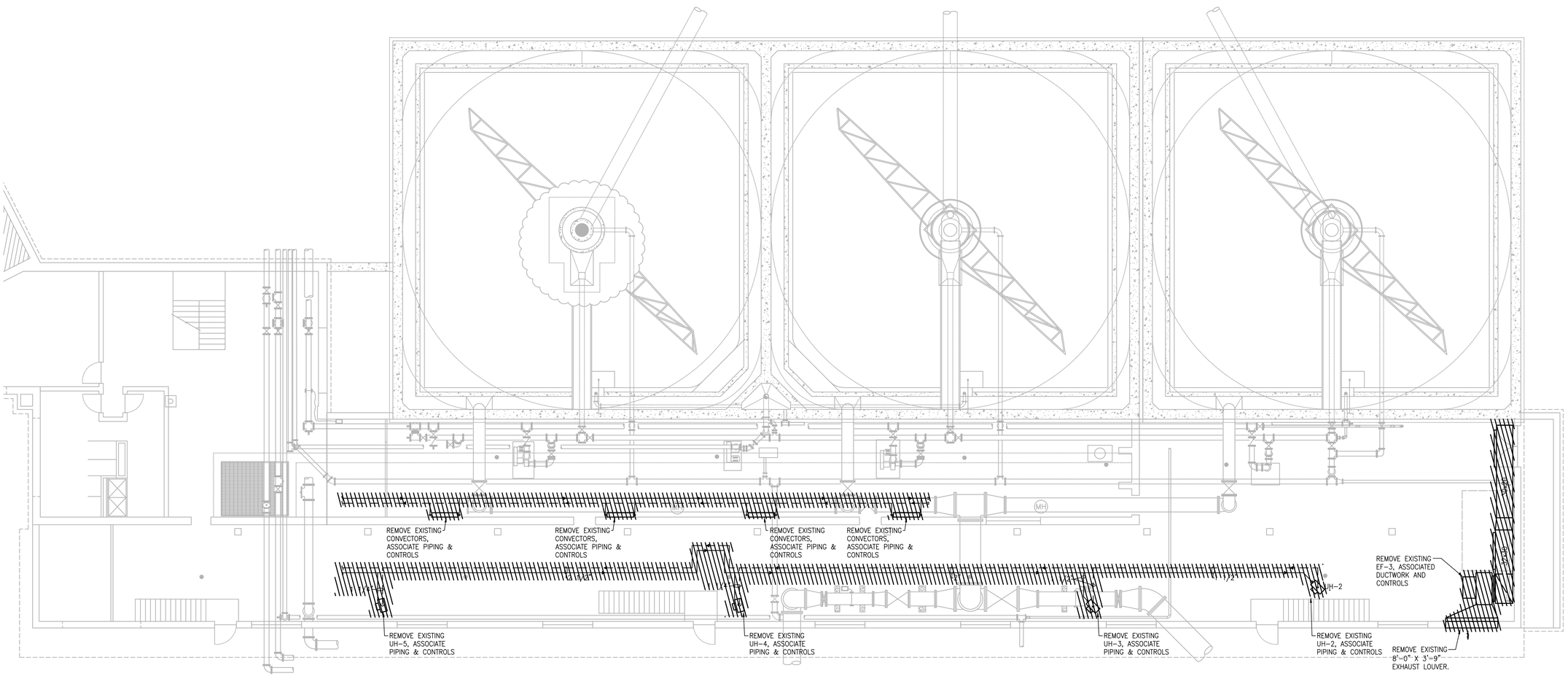

PLAN

SCALE: 1/8"= 1'-0"

PREPARED BY

BETA
www.BETA-Inc.com

REGISTERED PROFESSIONAL

COMMONWEALTH OF MASSACHUSETTS
ROBERT A. BROWN
MECHANICAL
NO. 45505
REGISTERED PROFESSIONAL ENGINEER

SUBCONSULTANT

SAR ENGINEERING, INC.

Mechanical/Electrical Engineers
150 Grossman Drive, Suite 309
Braintree, Massachusetts 02184
617 328-9215
web: www.sar.com

PROJECT

Taunton Wastewater Treatment Facility Improvements Phase 1

Taunton, MA

TITLE

Hvac Primary Clarifiers Demolition Plan

NO.	REVISIONS	DATE

DRAWN BY:	RLB
DESIGNED BY:	RHB
CHECKED BY:	RHB
ISSUE DATE:	7/2/21
BETA JOB NO.:	6050

SCALE

AS SHOWN

UNLESS OTHERWISE NOTED OR CHANGED BY REPRODUCTION

SHEET NO.

H-2.1

6/30/2021 9:46 AM W:\T-PROJECTS\T-18009.00 - TAUNTON WWTF UPGRADES\HVAC DEPARTMENT\PHASE 1\18009.00 HVAC PRIMARY CLARIFIERS & SLUDGE PS-PHASE 1.DWG (BETA STB BW.STB)

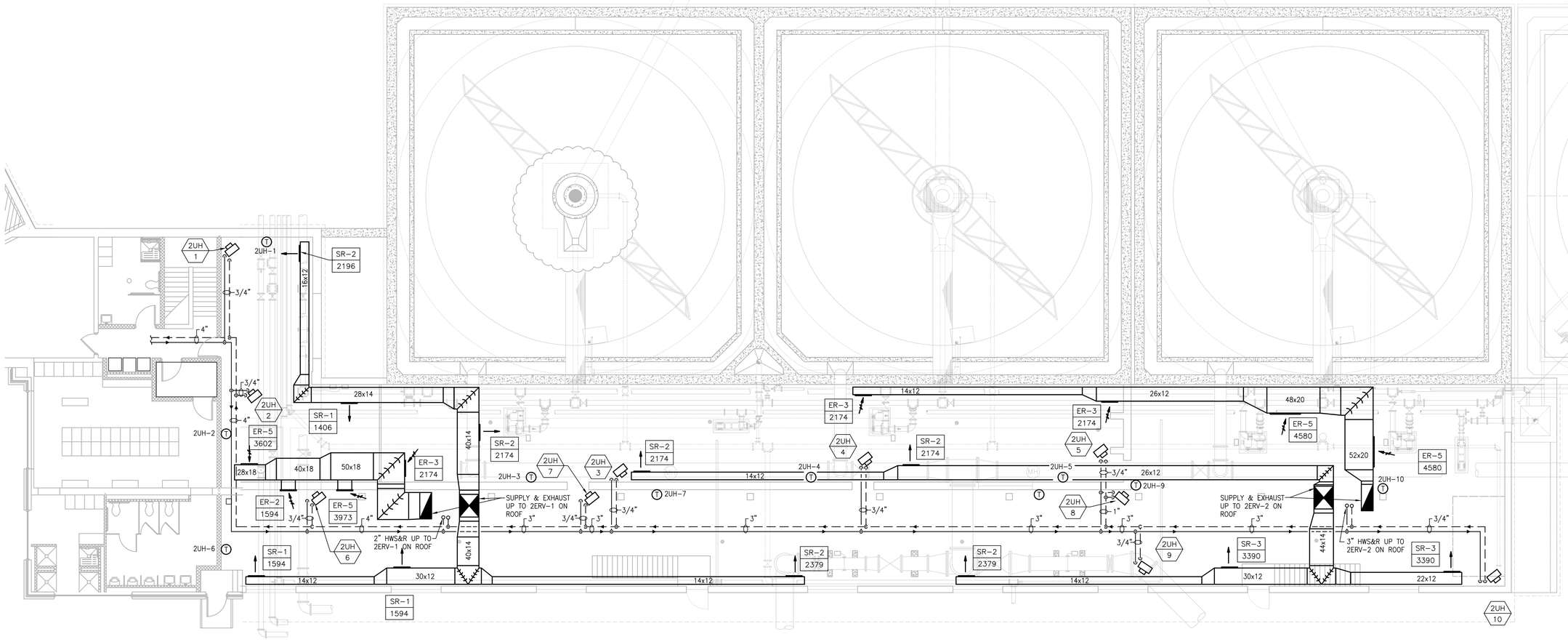

PLAN

SCALE: 1/8"= 1'-0"

PREPARED BY

BETA
www.BETA-Inc.com

REGISTERED PROFESSIONAL

COMMONWEALTH OF MASSACHUSETTS
ROBERT L. BROWN
MECHANICAL
No. 45605
REGISTERED PROFESSIONAL ENGINEER

SUBCONSULTANT

SAR ENGINEERING, INC.

Mechanical/Electrical Engineers
150 Grossman Drive, Suite 309
Braintree, Massachusetts 02184
617 328-9215
web: www.sar.com

PROJECT

Taunton Wastewater Treatment Facility Improvements Phase 1

Taunton, MA

TITLE

Hvac Pipe Gallery Plan

NO.	REVISIONS	DATE

DRAWN BY:	RLB
DESIGNED BY:	RHB
CHECKED BY:	RHB
ISSUE DATE:	7/2/21
BETA JOB NO.:	6050

SCALE

AS SHOWN

UNLESS OTHERWISE NOTED OR CHANGED BY REPRODUCTION

SHEET NO.

H-2.2

6/30/2021 9:46 AM W:\T-PROJECTS\T-18009.00 - TAUNTON WWTF UPGRADES\HVAC DEPARTMENT\PHASE 1\18009.00 HVAC PRIMARY CLARIFIERS & SLUDGE PS-PHASE 1.DWG (BETA STB BW.STB)

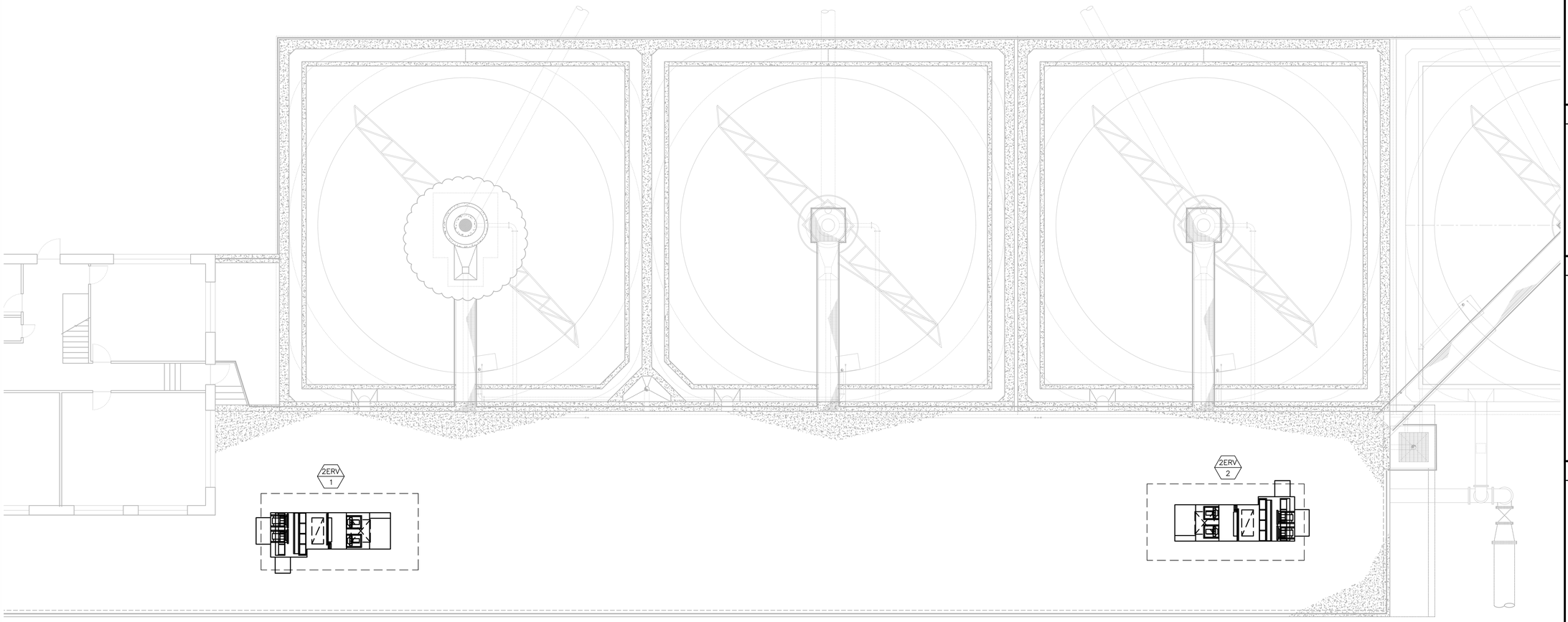

PLAN

SCALE: 1/8"= 1'-0"

PREPARED BY

BETA
www.BETA-Inc.com

REGISTERED PROFESSIONAL

COMMONWEALTH OF MASSACHUSETTS
RICHARD HOWARD BOSSERMAN
MECHANICAL
MECL 45505
REGISTERED PROFESSIONAL ENGINEER

SUBCONSULTANT

SAR ENGINEERING, INC.

Mechanical/Electrical Engineers
150 Grossman Drive, Suite 309
Braintree, Massachusetts 02184
617 328-9215
web: www.sar.com

PROJECT

Taunton Wastewater Treatment Facility Improvements Phase 1

Taunton, MA

TITLE

Hvac Pipe Gallery New Work Roof Plan

NO.	REVISIONS	DATE

DRAWN BY:	RLB
DESIGNED BY:	RHB
CHECKED BY:	RHB
ISSUE DATE:	7/2/21
BETA JOB NO.:	6050

SCALE

AS SHOWN

UNLESS OTHERWISE NOTED OR CHANGED BY REPRODUCTION

SHEET NO.

H-2.3

6/30/2021 9:46 AM W:\T-PROJECTS\T-18009.00 - TAUNTON WWTF UPGRADES\HVAC DEPARTMENT\PHASE 1\18009.00 HVAC PRIMARY CLARIFIERS & SLUDGE PS-PHASE 1.DWG (BETA STB BW.STB)

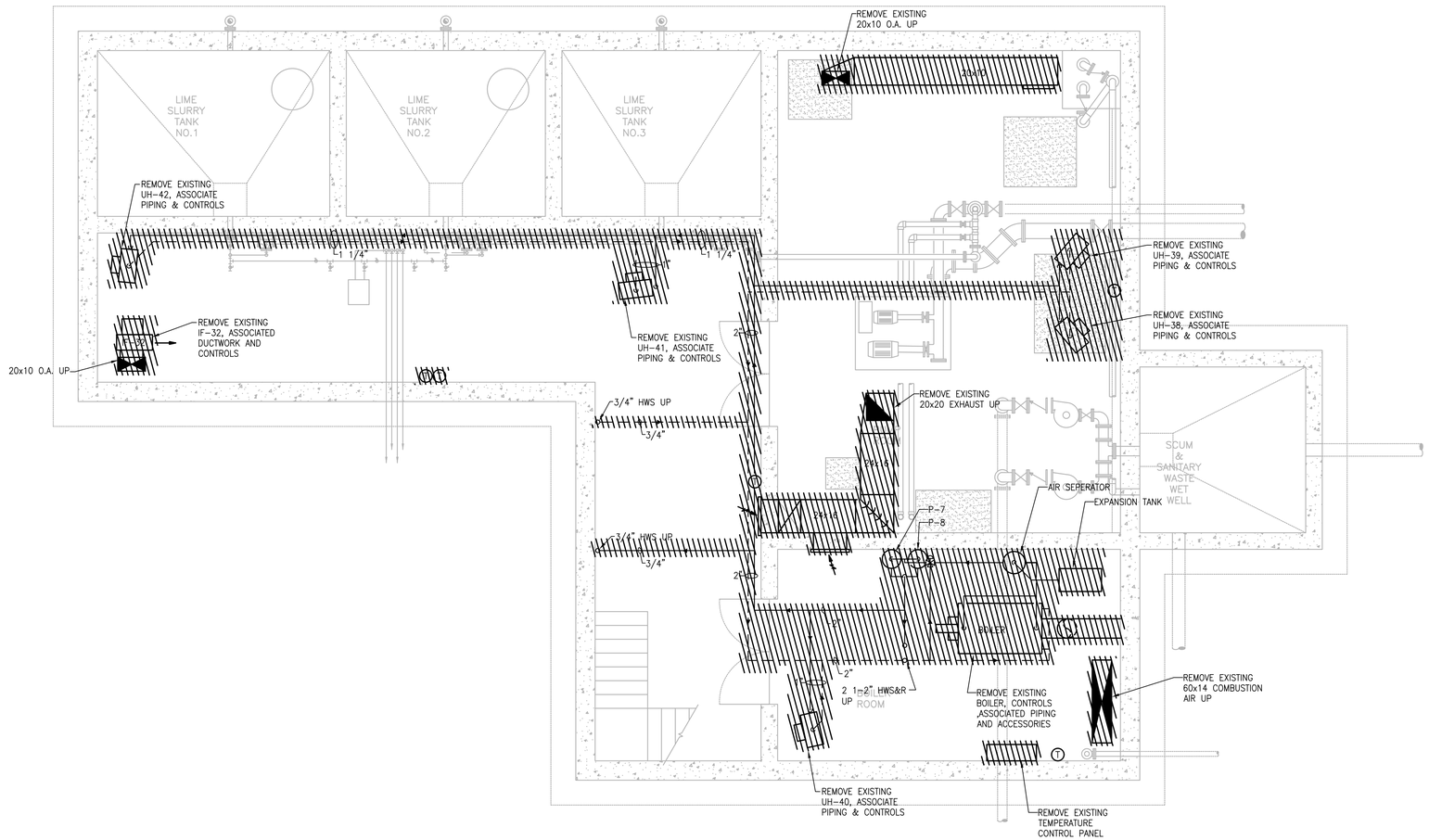

BASEMENT - PLAN

SCALE: 1/4"= 1'-0"

PREPARED BY

BETA
www.BETA-Inc.com

REGISTERED PROFESSIONAL

COMMONWEALTH OF MASSACHUSETTS
ROBERT H. BROWN
MECHANICAL
NO. 45555
REGISTERED PROFESSIONAL ENGINEER

SUBCONSULTANT

SAR ENGINEERING, INC.
Mechanical/Electrical Engineers
150 Grossman Drive, Suite 309
Braintree, Massachusetts 02184
617 328-9215
web: www.sar.com

PROJECT

Taunton Wastewater Treatment Facility Improvements Phase 1

Taunton, MA

TITLE

Hvac Demolition
Chemical Handling
Building
Basement Plan

NO.	REVISIONS	DATE

DRAWN BY:	RLB
DESIGNED BY:	RHB
CHECKED BY:	RHB
ISSUE DATE:	7/2/21
BETA JOB NO.:	6050

SCALE

AS SHOWN

UNLESS OTHERWISE NOTED OR CHANGED BY REPRODUCTION

SHEET NO.

H-5.1

6/30/2021 9:52 AM W:\T-PROJECTS\T-18009.00 - TAUNTON WWTF UPGRADES\HVAC DEPARTMENT\PHASE 1\18009.00 HVAC CHEMICAL HANDLING BUILDING-PHASE 1.DWG (BETA STB BW.STB)

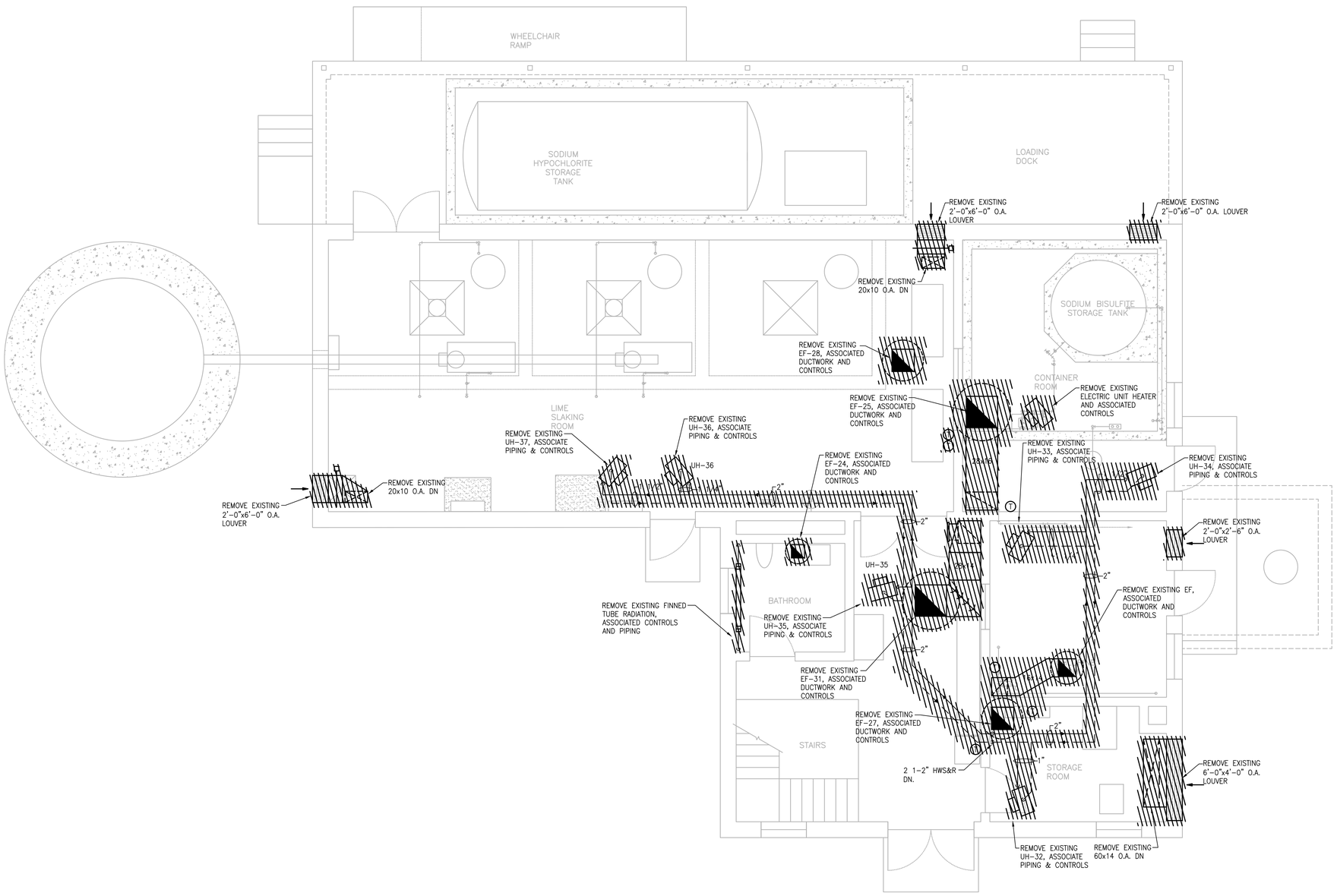

FIRST FLOOR - PLAN

SCALE: 1/4"= 1'-0"

PREPARED BY

BETA
www.BETA-Inc.com

REGISTERED PROFESSIONAL

COMMONWEALTH OF MASSACHUSETTS
ROBERT L. BROWN
MECHANICAL
NO. 45505
REGISTERED PROFESSIONAL ENGINEER

SUBCONSULTANT

SAR ENGINEERING, INC.

Mechanical/Electrical Engineers
150 Grossman Drive, Suite 309
Braintree, Massachusetts 02184
617 328-9215
web: www.sar.com

PROJECT

Taunton Wastewater Treatment Facility Improvements Phase 1

Taunton, MA

TITLE

Hvac Demolition Chemical Handling Building First Floor Plan

NO.	REVISIONS	DATE

DRAWN BY:	RLB
DESIGNED BY:	RHB
CHECKED BY:	RHB
ISSUE DATE:	7/2/21
BETA JOB NO.:	6050

SCALE

AS SHOWN

UNLESS OTHERWISE NOTED OR CHANGED BY REPRODUCTION

SHEET NO.

H-5.2

6/30/2021 9:53 AM W:\T-PROJECTS\T-18009.00 - TAUNTON WWTF UPGRADES\HVAC DEPARTMENT\PHASE 1\18009.00 HVAC CHEMICAL HANDLING BUILDING-PHASE 1.DWG (BETA STB BW.STB)

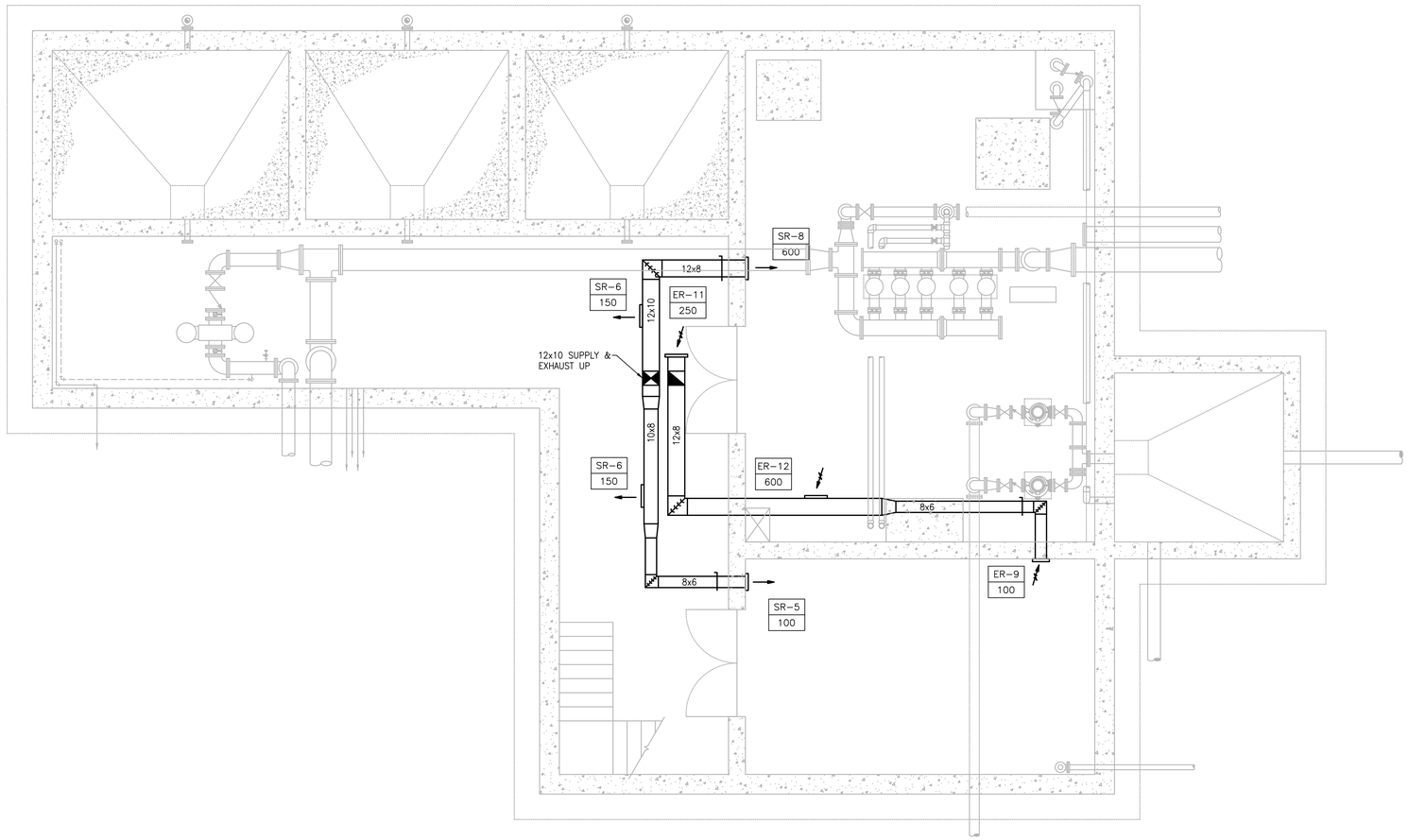

BASEMENT - PLAN

SCALE: 1/4"= 1'-0"

PREPARED BY

BETA
www.BETA-Inc.com

REGISTERED PROFESSIONAL

COMMONWEALTH OF MASSACHUSETTS
ROBERT H. BROWN
MECHANICAL
MEC. 45505
REGISTERED PROFESSIONAL ENGINEER

SUBCONSULTANT

SAR ENGINEERING, INC.
Mechanical/Electrical Engineers
150 Grossman Drive, Suite 309
Braintree, Massachusetts 02184
617 328-9215
web: www.sar.com

PROJECT

Taunton Wastewater Treatment Facility Improvements Phase 1

Taunton, MA

TITLE

Hvac Chemical Handling Building Basement Plan

NO.	REVISIONS	DATE

DRAWN BY:	RLB
DESIGNED BY:	RHB
CHECKED BY:	RHB
ISSUE DATE:	7/2/21
BETA JOB NO.:	6050

SCALE

AS SHOWN

UNLESS OTHERWISE NOTED OR CHANGED BY REPRODUCTION

SHEET NO.

H-5.3

6/30/2021 9:53 AM W:\T-PROJECTS\T-18009.00 - TAUNTON WWTF UPGRADES\HVAC DEPARTMENT\PHASE 1\18009.00 HVAC CHEMICAL HANDLING BUILDING-PHASE 1.DWG (BETA STB BW.STB)

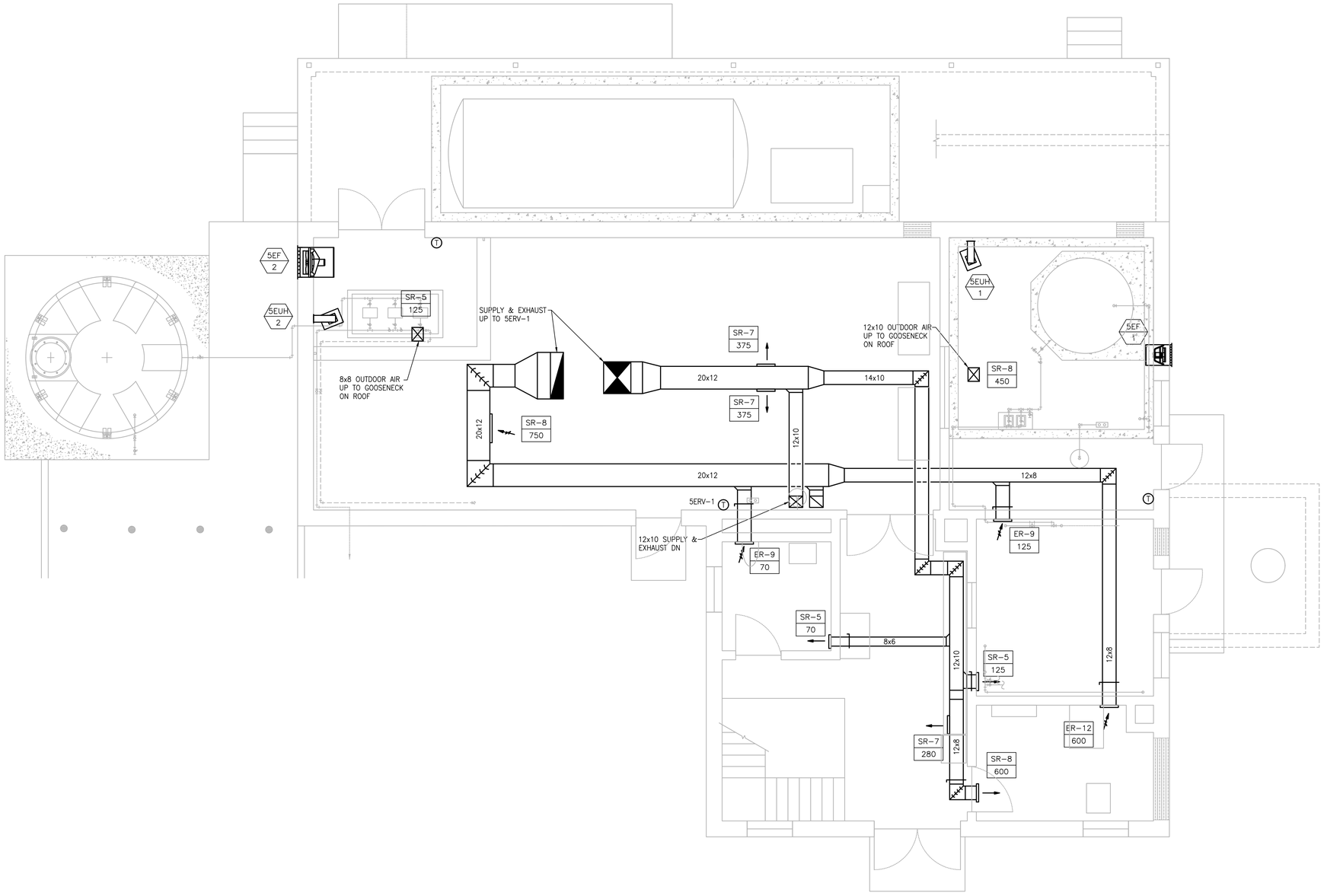

FIRST FLOOR - PLAN

SCALE: 1/4"= 1'-0"

PREPARED BY

BETA
www.BETA-Inc.com

REGISTERED PROFESSIONAL

COMMONWEALTH OF MASSACHUSETTS
RICHARDA. BROWN
MECHANICAL
NO. 45505
REGISTERED PROFESSIONAL ENGINEER

SUBCONSULTANT

SAR ENGINEERING, INC.

Mechanical/Electrical Engineers
150 Grossman Drive, Suite 309
Braintree, Massachusetts 02184
617 328-9215
web: www.sar.com

PROJECT

Taunton Wastewater Treatment Facility Improvements Phase 1

Taunton, MA

TITLE

Hvac Chemical Handling Building First Floor Plan

NO.	REVISIONS	DATE

DRAWN BY:	RLB
DESIGNED BY:	RHB
CHECKED BY:	RHB
ISSUE DATE:	7/2/21
BETA JOB NO.:	6050

SCALE

AS SHOWN

UNLESS OTHERWISE NOTED OR CHANGED BY REPRODUCTION

SHEET NO.

H-5.4

6/30/2021 9:53 AM W:\T-PROJECTS\T-18009.00 - TAUNTON WWTF UPGRADES\HVAC DEPARTMENT\PHASE 1\18009.00 HVAC CHEMICAL HANDLING BUILDING-PHASE 1.DWG (BETA STB BW.STB)

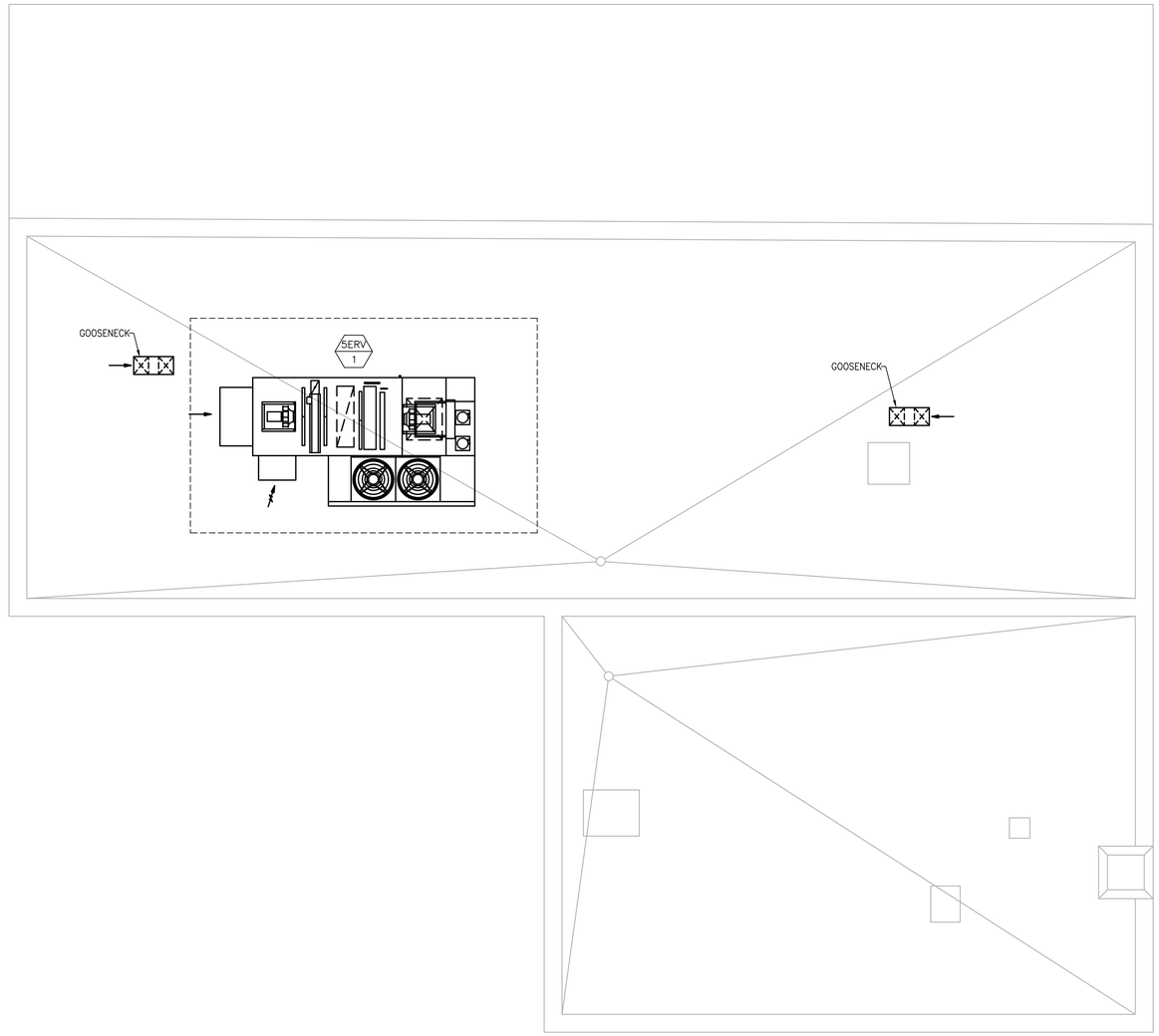

FIRST FLOOR - PLAN

SCALE: 1/4"= 1'-0"

PREPARED BY

BETA
www.BETA-Inc.com

REGISTERED PROFESSIONAL

COMMONWEALTH OF MASSACHUSETTS
ROBERT A. BROWN
MECHANICAL
No. 45505
REGISTERED PROFESSIONAL ENGINEER

SUBCONSULTANT

SAR ENGINEERING, INC.

Mechanical/Electrical Engineers
150 Grossman Drive, Suite 309
Braintree, Massachusetts 02184
617 328-9215
web: www.sar.com

PROJECT

Taunton Wastewater Treatment Facility Improvements Phase 1

Taunton, MA

TITLE

Hvac Chemical Handling Building Roof Plan

NO.	REVISIONS	DATE

DRAWN BY:	RLB
DESIGNED BY:	RHB
CHECKED BY:	RHB
ISSUE DATE:	7/2/21
BETA JOB NO.:	6050

SCALE

AS SHOWN

UNLESS OTHERWISE NOTED OR CHANGED BY REPRODUCTION

SHEET NO.

H-5.5

6/30/2021 9:53 AM W:\T-PROJECTS\T-18009.00 - TAUNTON WWTF UPGRADES\HVAC DEPARTMENT\PHASE 1\18009.00 HVAC CHEMICAL HANDLING BUILDING-PHASE 1.DWG (BETA STB BW.STB)

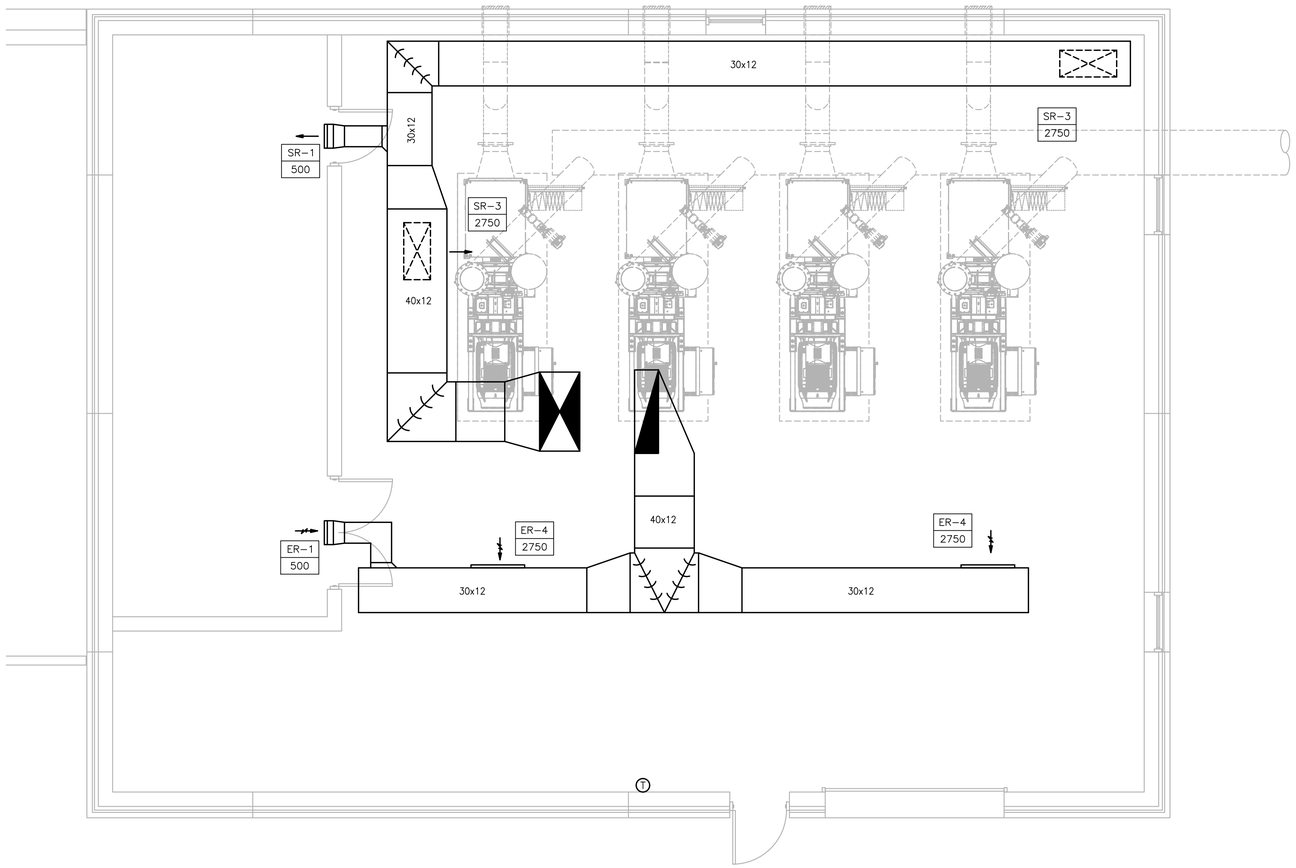

PLAN

SCALE: 1/4"= 1'-0"

PREPARED BY

BETA
www.BETA-Inc.com

REGISTERED PROFESSIONAL

COMMONWEALTH OF MASSACHUSETTS
ROBERT L. BROWN
MECHANICAL
No. 45505
REGISTERED PROFESSIONAL ENGINEER

SUBCONSULTANT

SAR ENGINEERING, INC.

Mechanical/Electrical Engineers
150 Grossman Drive, Suite 309
Braintree, Massachusetts 02184
617 328-9215
web: www.sar.com

PROJECT

Taunton Wastewater Treatment Facility Improvements Phase 1

Taunton, MA

TITLE

Hvac Blower Building Plan

NO.	REVISIONS	DATE

DRAWN BY:	RLB
DESIGNED BY:	MC
CHECKED BY:	MC
ISSUE DATE:	7/2/21
BETA JOB NO.:	6050

SCALE

AS SHOWN

UNLESS OTHERWISE NOTED OR CHANGED BY REPRODUCTION

SHEET NO.

H-6.1

6/30/2021 9:54 AM W:\T-PROJECTS\T-18009.00 - TAUNTON WWTF UPGRADES\HVAC DEPARTMENT\PHASE 1\18009.00 HVAC NEW BLOWER BUILDING-PHASE 1.DWG (BETA STB BW.STB)

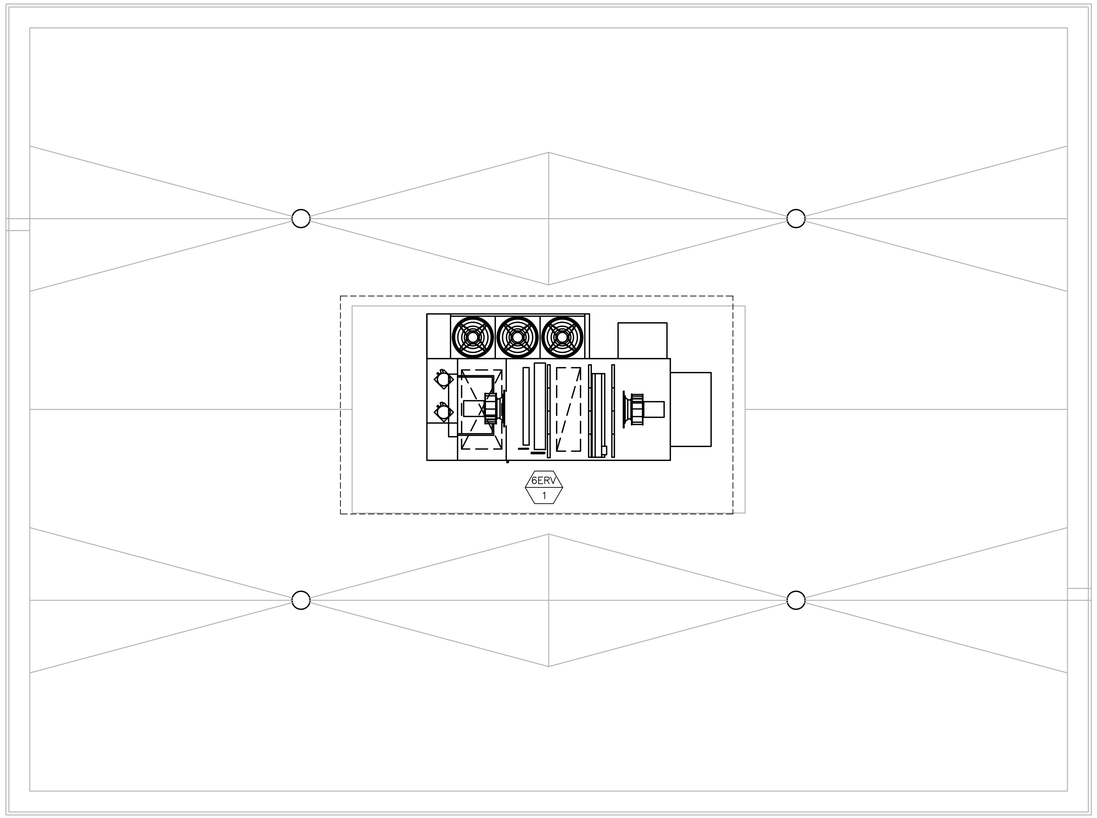

ROOF PLAN
SCALE: 1/4"= 1'-0"

PREPARED BY

BETA
www.BETA-Inc.com

REGISTERED PROFESSIONAL

SUBCONSULTANT

SAR ENGINEERING, INC.

Mechanical/Electrical Engineers
150 Grossman Drive, Suite 309
Braintree, Massachusetts 02184
617 328-9215
web: www.sar.com

PROJECT

Taunton Wastewater Treatment Facility Improvements Phase 1

Taunton, MA

TITLE

Hvac Blower Building Roof Plan

NO.	REVISIONS	DATE

DRAWN BY:	RLB
DESIGNED BY:	MC
CHECKED BY:	MC
ISSUE DATE:	7/2/21
BETA JOB NO.:	6050

SCALE

AS SHOWN

UNLESS OTHERWISE NOTED OR CHANGED BY REPRODUCTION

SHEET NO.

H-6.2

6/30/2021 9:54 AM W:\T-PROJECTS\T-18009.00 - TAUNTON WWTF UPGRADES\HVAC DEPARTMENT\PHASE 1\18009.00 HVAC NEW BLOWER BUILDING-PHASE 1.DWG (BETA STB BW.STB)

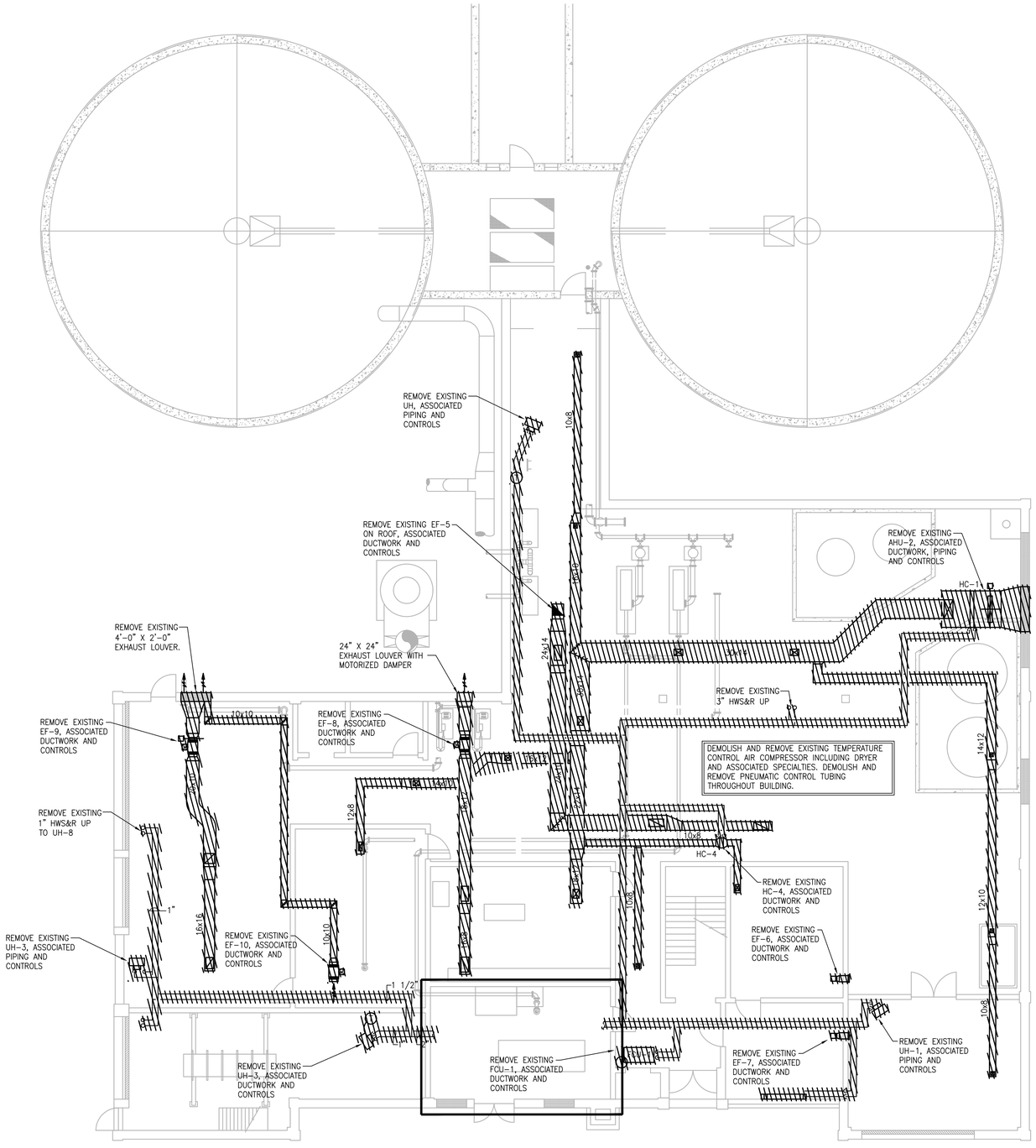

FIRST FLOOR - PLAN

SCALE: 1/8"= 1'-0"

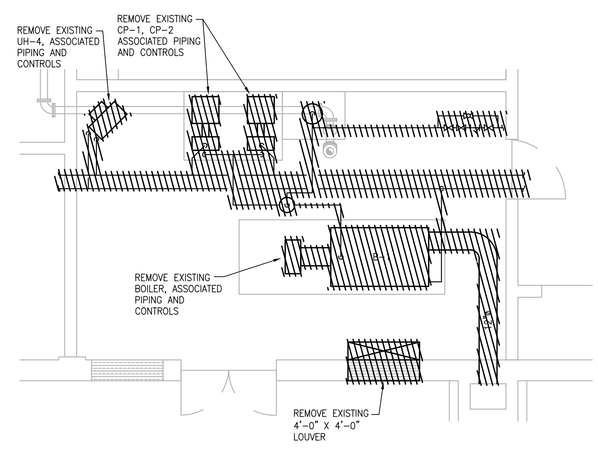

BOILER ROOM PART PLAN

SCALE: 1/4"= 1'-0"

PREPARED BY

BETA
www.BETA-Inc.com

REGISTERED PROFESSIONAL

COMMONWEALTH OF MASSACHUSETTS
ROBERT H. BROWN
MECHANICAL
NO. 45505
REGISTERED PROFESSIONAL ENGINEER

SUBCONSULTANT

SAR ENGINEERING, INC.
Mechanical/Electrical Engineers
150 Grossman Drive, Suite 309
Braintree, Massachusetts 02184
617.328.9215
web: www.sar.com

PROJECT

Taunton Wastewater Treatment Facility Improvements Phase 1

Taunton, MA

TITLE

Hvac Demoltion Solids Handling Building First Floor Plan

NO.	REVISIONS	DATE

DRAWN BY:	RLB
DESIGNED BY:	RHB
CHECKED BY:	RHB
ISSUE DATE:	7/2/21
BETA JOB NO.:	6050

SCALE

AS SHOWN

UNLESS OTHERWISE NOTED OR CHANGED BY REPRODUCTION

SHEET NO.

H-7.1

6/30/2021 9:48 AM W:\T-PROJECTS\T-18009.00 - TAUNTON WWTF UPGRADES\HVAC DEPARTMENT\PHASE 1\18009.00 HVAC SOLIDS HANDLING BUILDING-PHASE 1.DWG (BETA STB BW.STB)

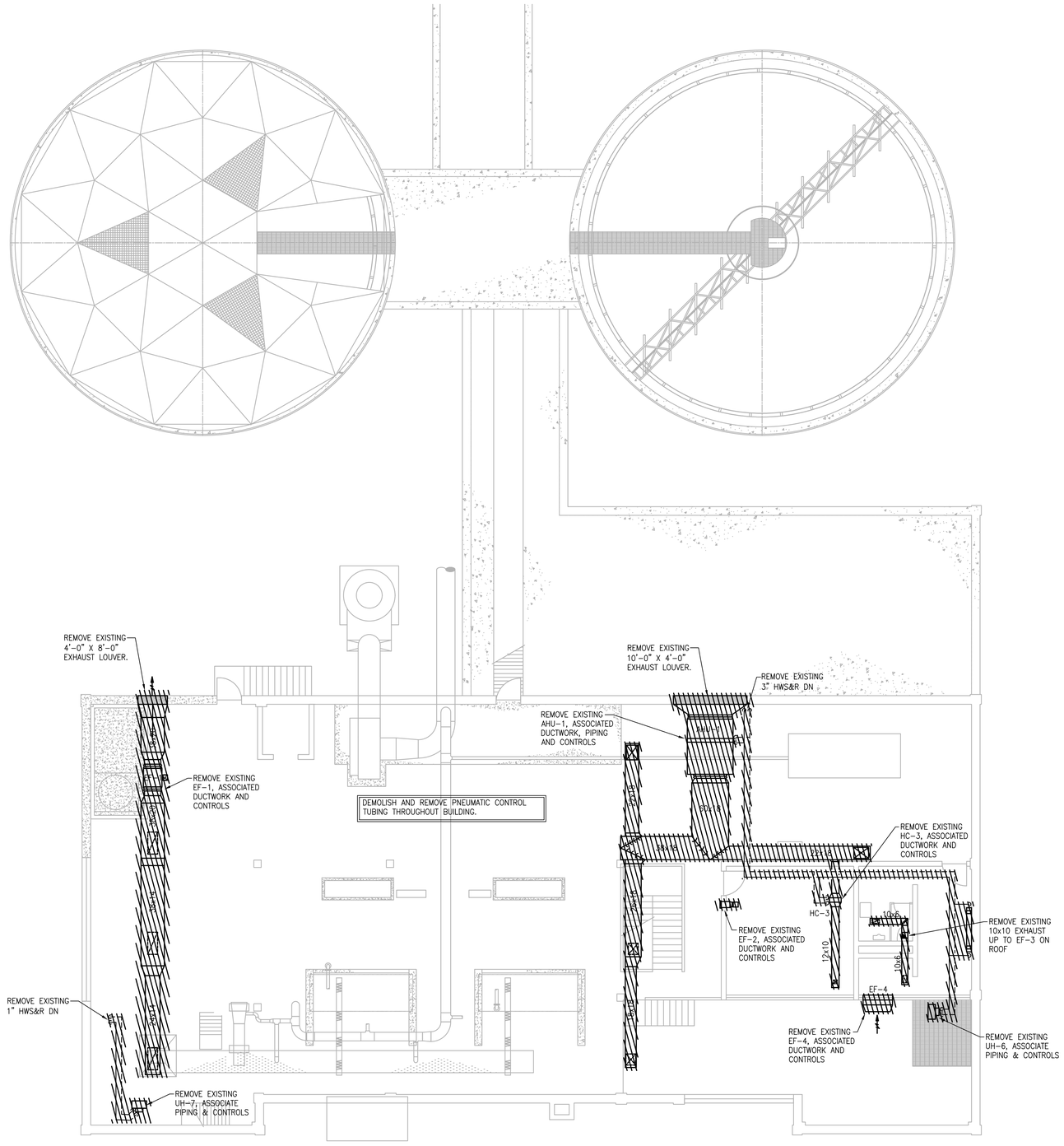

SECOND FLOOR - PLAN

SCALE: 1/8"= 1'-0"

PREPARED BY

BETA
www.BETA-Inc.com

REGISTERED PROFESSIONAL

COMMONWEALTH OF MASSACHUSETTS
ROBERT H. BROWN
MECHANICAL
NO. 45505
REGISTERED PROFESSIONAL ENGINEER

SUBCONSULTANT

SAR ENGINEERING, INC.

Mechanical/Electrical Engineers
150 Grossman Drive, Suite 309
Braintree, Massachusetts 02184
617 328-9215
web: www.sar.com

PROJECT

Taunton Wastewater Treatment Facility Improvements Phase 1

Taunton, MA

TITLE

Hvac Demolition Solids Handling Building Second Floor Plan

NO.	REVISIONS	DATE

DRAWN BY:	RLB
DESIGNED BY:	RHB
CHECKED BY:	RHB
ISSUE DATE:	7/2/21
BETA JOB NO.:	6050

SCALE

AS SHOWN

UNLESS OTHERWISE NOTED OR CHANGED BY REPRODUCTION

SHEET NO.

H-7.2

6/30/2021 9:48 AM W:\T-PROJECTS\T-18009.00 - TAUNTON WWTF UPGRADES\HVAC DEPARTMENT\PHASE 1\18009.00 HVAC SOLIDS HANDLING BUILDING-PHASE 1.DWG (BETA STB BW.STB)

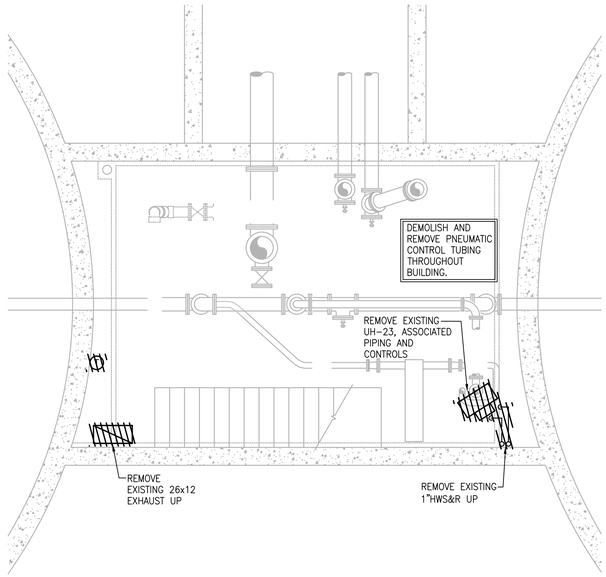

LOWER LEVEL - PLAN

SCALE: 1/4"= 1'-0"

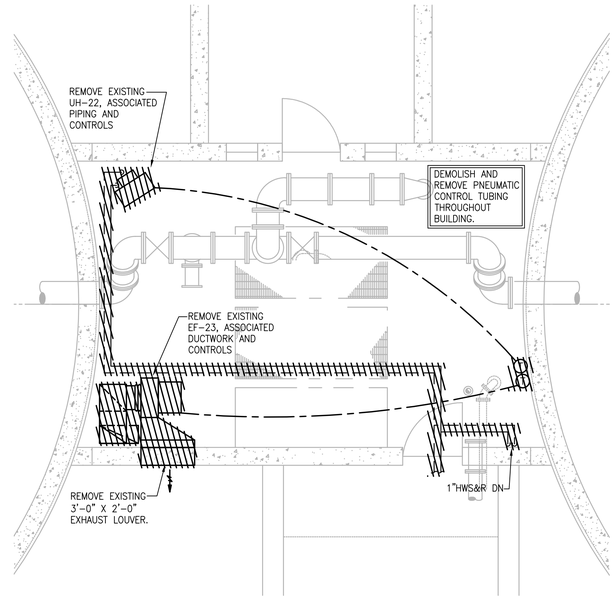

UPPER LEVEL - PLAN

SCALE: 1/4"= 1'-0"

PREPARED BY

BETA
www.BETA-Inc.com

REGISTERED PROFESSIONAL

COMMONWEALTH OF MASSACHUSETTS
RICHARD H. BROWN
MECHANICAL
No. 45555
REGISTERED PROFESSIONAL ENGINEER

SUBCONSULTANT

SAR ENGINEERING, INC.

Mechanical/Electrical Engineers
150 Grossman Drive, Suite 309
Braintree, Massachusetts 02184
617 328-9215
web: www.sar.com

PROJECT

Taunton Wastewater Treatment Facility Improvements Phase 1

Taunton, MA

TITLE

Hvac Demolition
Solids Handling
Building
Plans

NO.	REVISIONS	DATE

DRAWN BY:	RLB
DESIGNED BY:	RHB
CHECKED BY:	RHB
ISSUE DATE:	7/2/21
BETA JOB NO.:	6050

SCALE

AS SHOWN

UNLESS OTHERWISE NOTED OR CHANGED BY REPRODUCTION

SHEET NO.

H-7.3

6/30/2021 9:48 AM W:\T-PROJECTS\T-18009.00 - TAUNTON WWTF UPGRADES\HVAC DEPARTMENT\PHASE 1\18009.00 HVAC SOLIDS HANDLING BUILDING-PHASE 1.DWG (BETA STB BW.STB)

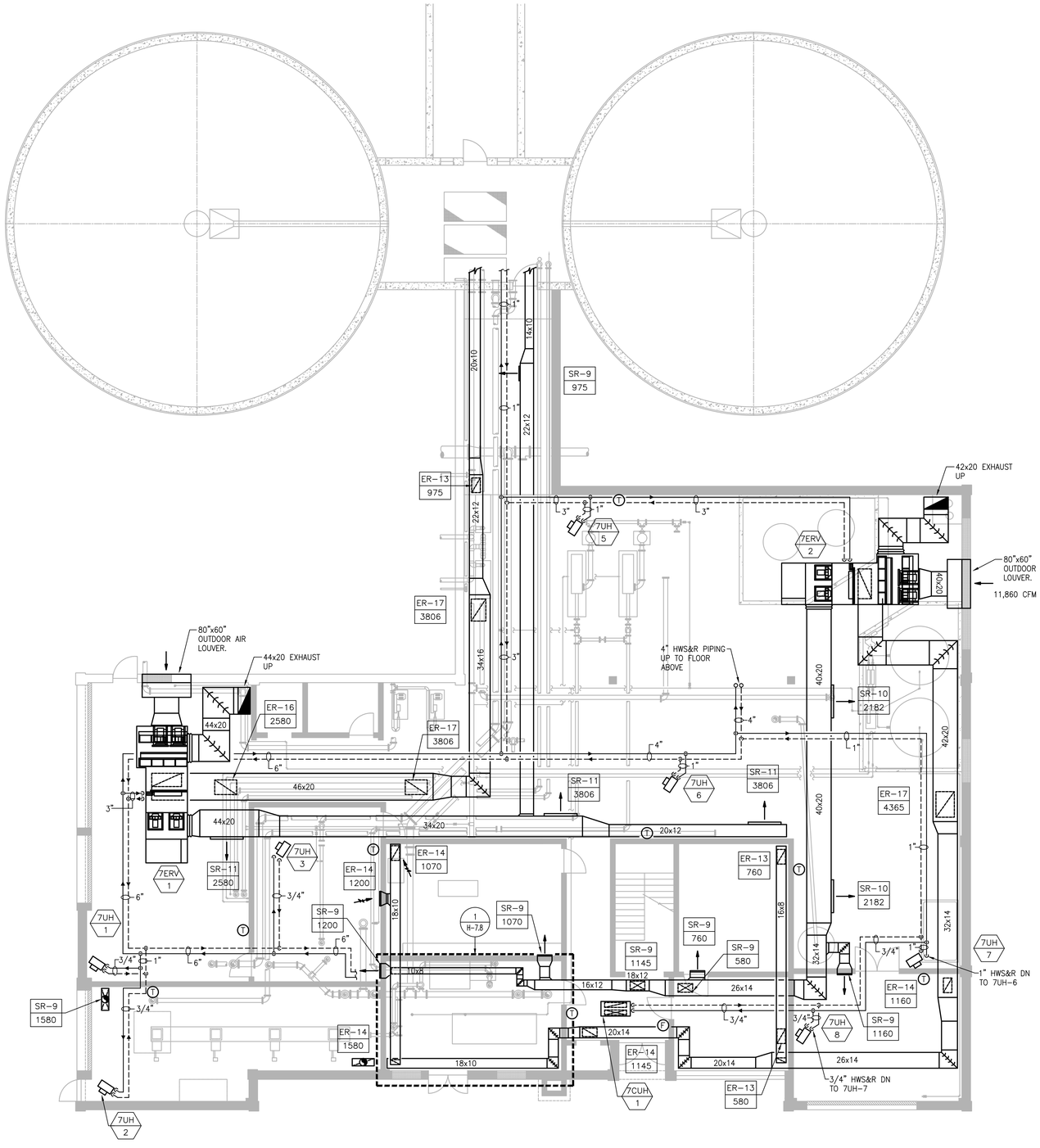

FIRST FLOOR - PLAN

SCALE: 1/8"= 1'-0"

PREPARED BY

BETA
www.BETA-Inc.com

REGISTERED PROFESSIONAL

COMMONWEALTH OF MASSACHUSETTS
ROBERT H. BROWN
MECHANICAL
NO. 45505
REGISTERED PROFESSIONAL ENGINEER

SUBCONSULTANT

SAR ENGINEERING, INC.

Mechanical/Electrical Engineers
150 Grossman Drive, Suite 309
Braintree, Massachusetts 02184
617 328-9215
web: www.sar.com

PROJECT

Taunton Wastewater Treatment Facility Improvements Phase 1

Taunton, MA

TITLE

Hvac New Work
Solids Handling Building
First Floor Plan

NO.	REVISIONS	DATE

DRAWN BY:	RLB
DESIGNED BY:	RHB
CHECKED BY:	RHB
ISSUE DATE:	7/2/21
BETA JOB NO.:	6050

SCALE

AS SHOWN

UNLESS OTHERWISE NOTED OR CHANGED BY REPRODUCTION

SHEET NO.

H-7.4

6/30/2021 9:49 AM W:\T-PROJECTS\T-18009.00 - TAUNTON WWTF UPGRADES\HVAC DEPARTMENT\PHASE 1\18009.00 HVAC SOLIDS HANDLING BUILDING-PHASE 1.DWG (BETA STB BW.STB)

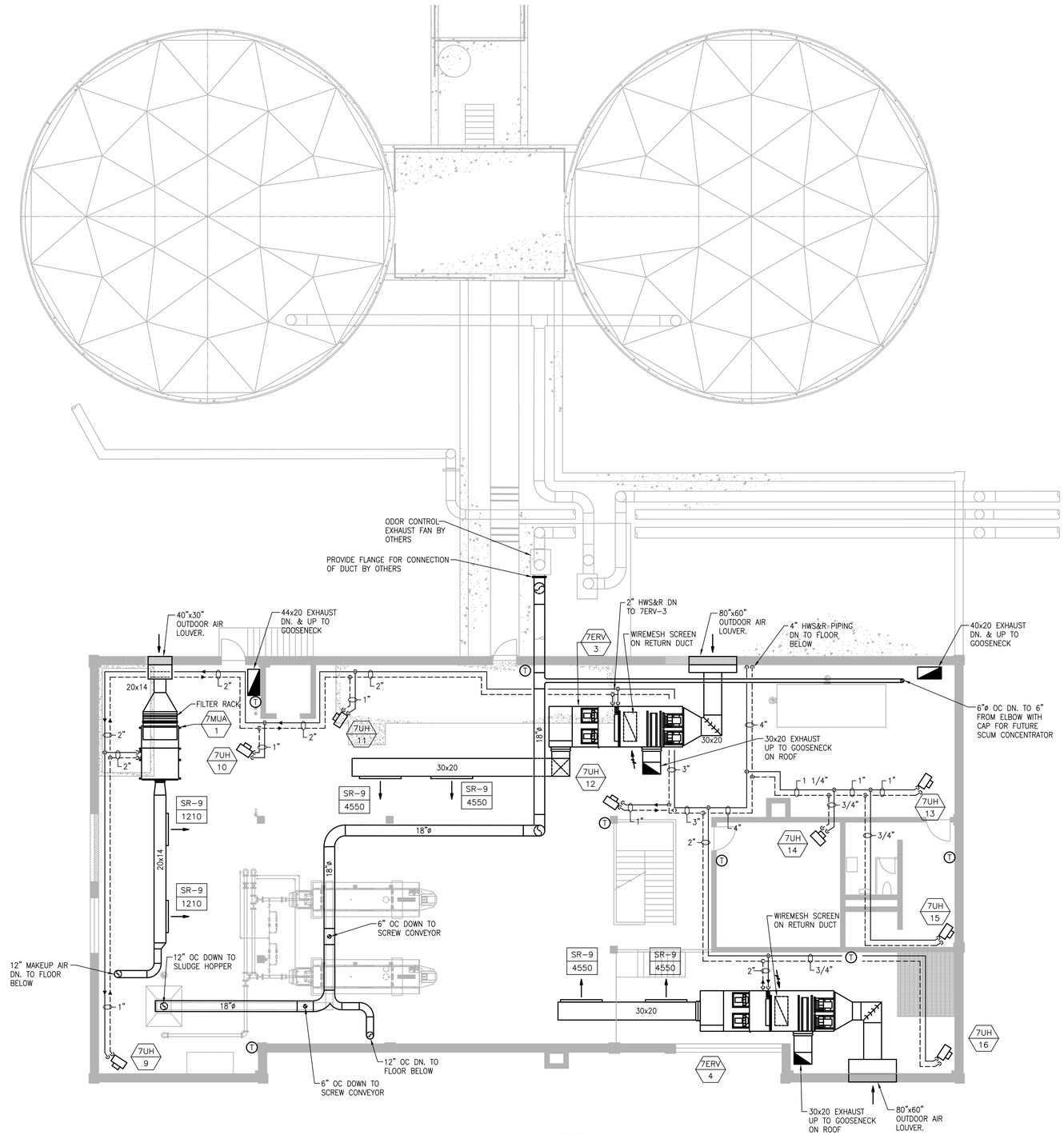

SECOND FLOOR - PLAN

SCALE: 1/8"= 1'-0"

PREPARED BY

BETA
www.BETA-Inc.com

REGISTERED PROFESSIONAL

COMMONWEALTH OF MASSACHUSETTS
ROBERT H. BROWN
MECHANICAL
NO. 45505
REGISTERED PROFESSIONAL ENGINEER

SUBCONSULTANT

SAR ENGINEERING, INC.

Mechanical/Electrical Engineers
150 Grossman Drive, Suite 309
Braintree, Massachusetts 02184
617 328-9215
web: www.sar.com

PROJECT

Taunton Wastewater Treatment Facility Improvements Phase 1

Taunton, MA

TITLE

Hvac New Work Solids Handling Building Second Floor Plan

NO.	REVISIONS	DATE

DRAWN BY:	RLB
DESIGNED BY:	RHB
CHECKED BY:	RHB
ISSUE DATE:	7/2/21
BETA JOB NO.:	6050

SCALE

AS SHOWN

UNLESS OTHERWISE NOTED OR CHANGED BY REPRODUCTION

SHEET NO.

H-7.5

6/30/2021 9:49 AM W:\T-PROJECTS\T-18009.00 - TAUNTON WWTF UPGRADES\HVAC DEPARTMENT\PHASE 1\18009.00 HVAC SOLIDS HANDLING BUILDING-PHASE 1.DWG (BETA STB BW.STB)

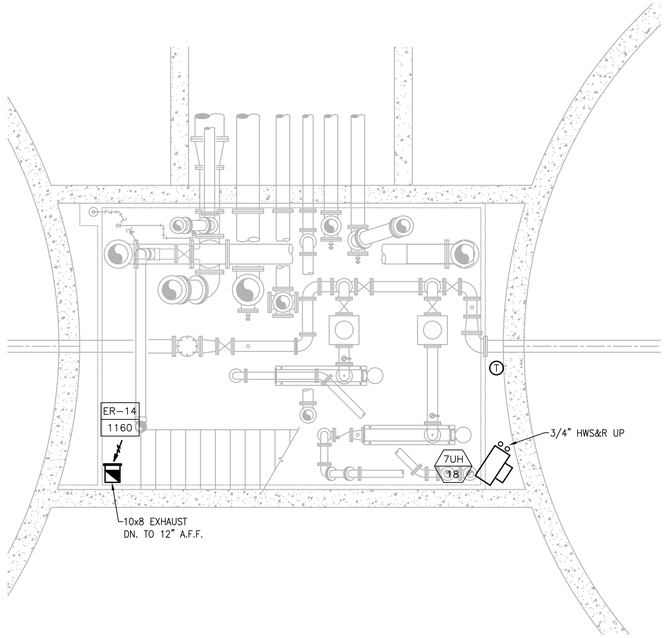

LOWER LEVEL - PLAN

SCALE: 1/4"= 1'-0"

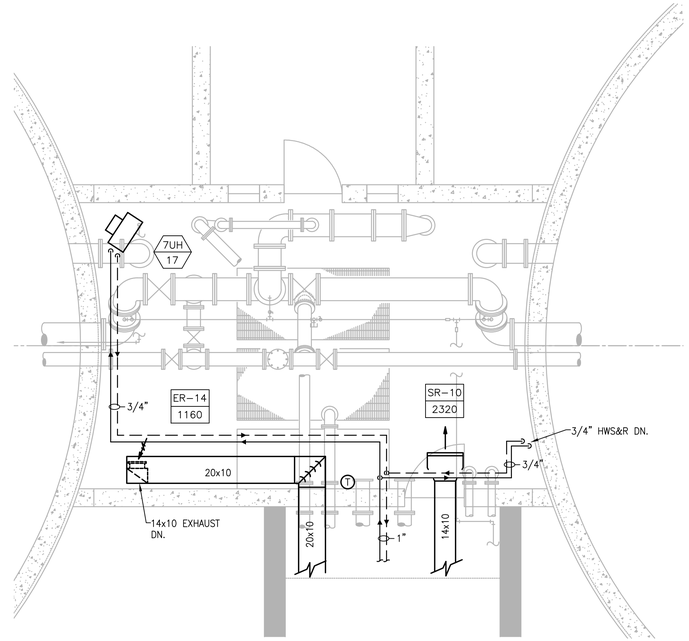

UPPER LEVEL - PLAN

SCALE: 1/4"= 1'-0"

PREPARED BY

BETA
www.BETA-Inc.com

REGISTERED PROFESSIONAL

COMMONWEALTH OF MASSACHUSETTS
ROBERT H. BROWN
MECHANICAL
NO. 45505
REGISTERED PROFESSIONAL ENGINEER

SUBCONSULTANT

SAR ENGINEERING, INC.

Mechanical/Electrical Engineers
150 Grossman Drive, Suite 309
Braintree, Massachusetts 02184
617 328-9215
web: www.sar.com

PROJECT

Taunton Wastewater Treatment Facility Improvements Phase 1

Taunton, MA

TITLE

Hvac New Work
Solids Handling
Building
Plans

NO.	REVISIONS	DATE

DRAWN BY:	RLB
DESIGNED BY:	RHB
CHECKED BY:	RHB
ISSUE DATE:	7/2/21
BETA JOB NO.:	6050

SCALE

AS SHOWN

UNLESS OTHERWISE NOTED OR CHANGED BY REPRODUCTION

SHEET NO.

H-7.6

6/30/2021 9:51 AM W:\IT-PROJECTS\IT-18009.00 - TAUNTON WWTF UPGRADES\HVAC DEPARTMENT\PHASE 1\18009.00 HVAC SOLIDS HANDLING BUILDING-PHASE 1.DWG (BETA STB BW.STB)

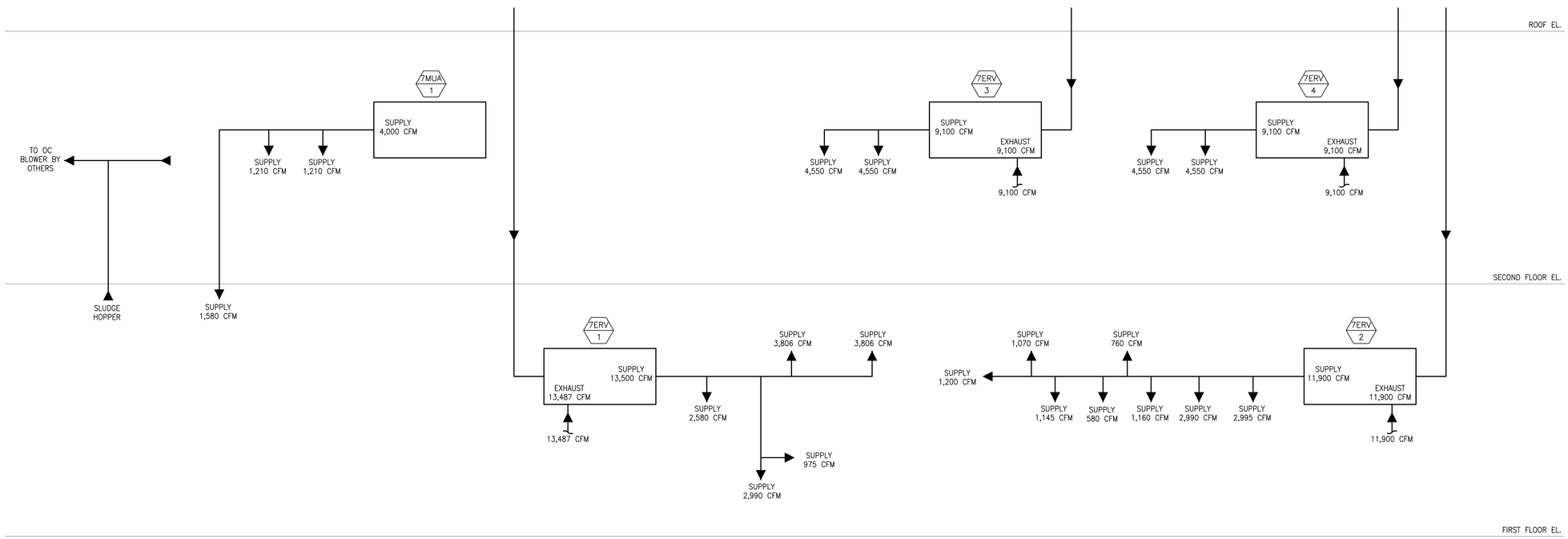

PREPARED BY

BETA
www.BETA-Inc.com

REGISTERED PROFESSIONAL

COMMONWEALTH OF MASSACHUSETTS
ROBERT H. BROWN
MECHANICAL
NO. 45505
REGISTERED PROFESSIONAL ENGINEER

SUBCONSULTANT

SAR ENGINEERING, INC.

Mechanical/Electrical Engineers
150 Grossman Drive, Suite 309
Braintree, Massachusetts 02184
617.328-9215
web: www.sar.com

PROJECT

Taunton Wastewater Treatment Facility Improvements Phase 1

Taunton, MA

TITLE

Hvac Solids Handling Building Air Flow Diagram

NO.	REVISIONS	DATE

DRAWN BY:	RLB
DESIGNED BY:	RHB
CHECKED BY:	RHB
ISSUE DATE:	7/2/21
BETA JOB NO.:	6050

SCALE

AS SHOWN

UNLESS OTHERWISE NOTED OR CHANGED BY REPRODUCTION

SHEET NO.

H-7.7

6/30/2021 9:51 AM W:\T-PROJECTS\T-18009.00 - TAUNTON WWTF UPGRADES\HVAC DEPARTMENT\PHASE 1\18009.00 HVAC SOLIDS HANDLING BUILDING-PHASE 1.DWG (BETA STB BW.STB)

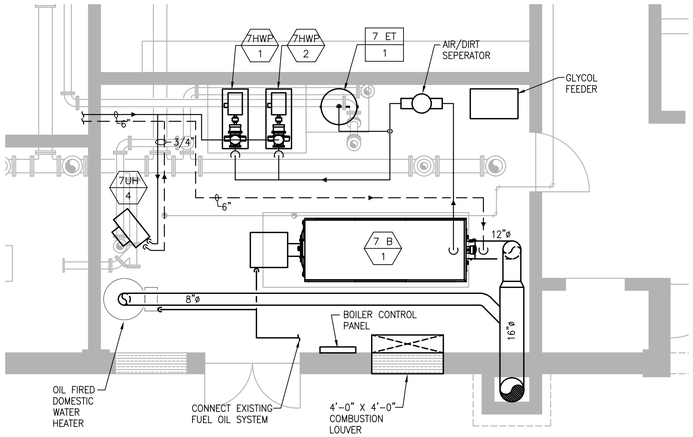

BOILER ROOM PART PLAN

SCALE: 1/4"= 1'-0"

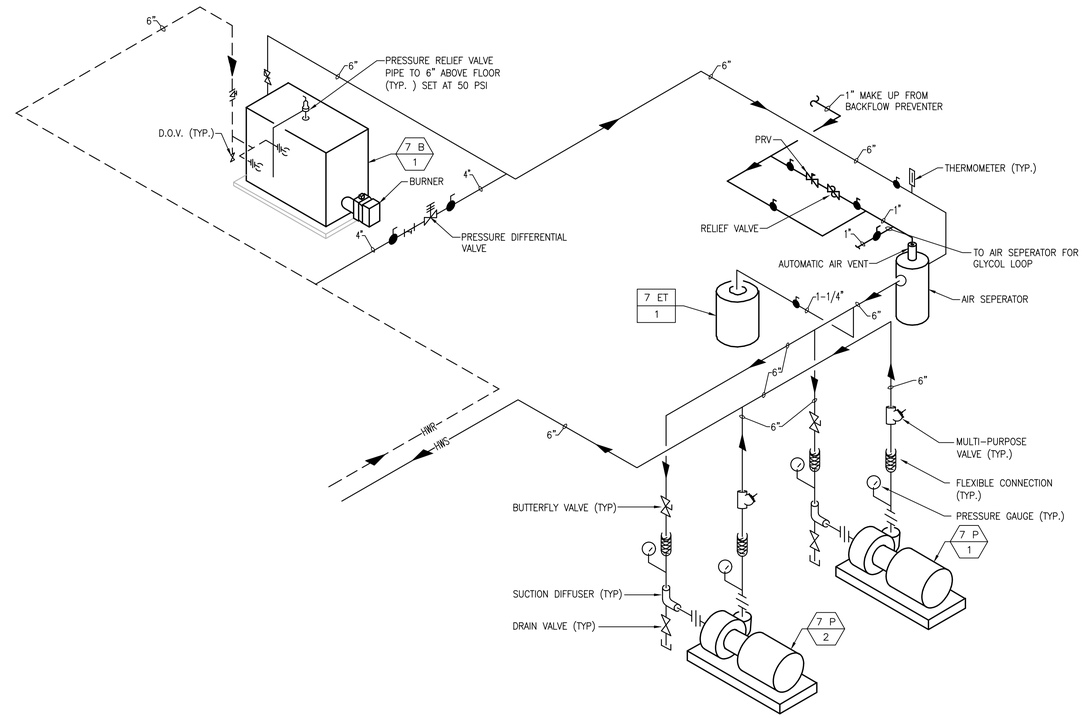

PIPING SCHEMATIC

NO SCALE

PREPARED BY

BETA
www.BETA-Inc.com

REGISTERED PROFESSIONAL

SUBCONSULTANT

SAR ENGINEERING, INC.

Mechanical/Electrical Engineers
150 Grossman Drive, Suite 309
Braintree, Massachusetts 02184
617 328-9215
web: www.sar.com

PROJECT

Taunton Wastewater Treatment Facility Improvements Phase 1

Taunton, MA

TITLE

Hvac New Work
Solids Handling
Building
Boiler Room
Part Plan

NO.	REVISIONS	DATE

DRAWN BY:	RLB
DESIGNED BY:	RHB
CHECKED BY:	RHB
ISSUE DATE:	7/2/21
BETA JOB NO.:	6050

SCALE

AS SHOWN

UNLESS OTHERWISE NOTED OR CHANGED BY REPRODUCTION

SHEET NO.

H-7.8

6/30/2021 9:52 AM W:\T-PROJECTS\T-18009.00 - TAUNTON WWTF UPGRADES\HVAC DEPARTMENT\PHASE 1\18009.00 HVAC SOLIDS HANDLING BUILDING-PHASE 1.DWG (BETA STB BW.STB)

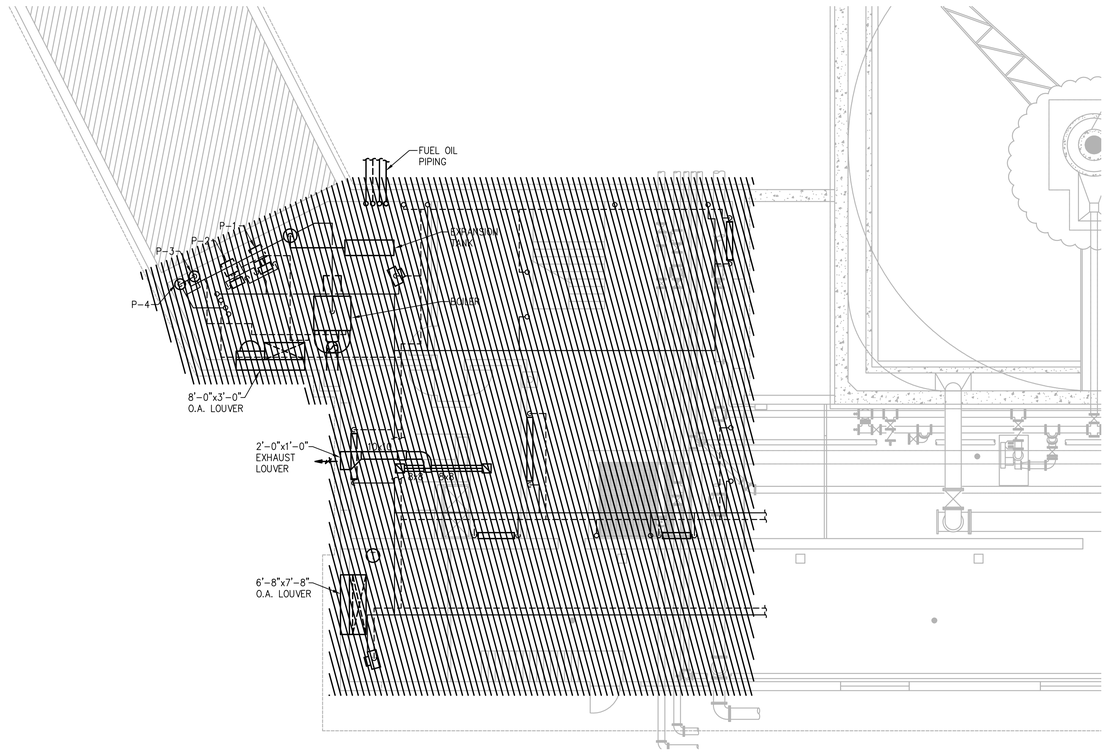

BASEMENT FLOOR - PLAN

SCALE: 1/8"= 1'-0"

PREPARED BY

BETA
www.BETA-Inc.com

REGISTERED PROFESSIONAL

COMMONWEALTH OF MASSACHUSETTS
ROBERT H. BROWN
MECHANICAL
NO. 45505
REGISTERED PROFESSIONAL ENGINEER

SUBCONSULTANT

SAR ENGINEERING, INC.

Mechanical/Electrical Engineers
150 Grossman Drive, Suite 309
Braintree, Massachusetts 02184
617 328-9215
web: www.sar.com

PROJECT

Taunton Wastewater Treatment Facility Improvements Phase 1

Taunton, MA

TITLE

Hvac Demolition Control & Admin. Building Basement Plan

NO.	REVISIONS	DATE

DRAWN BY:	RLB
DESIGNED BY:	RHB
CHECKED BY:	RHB
ISSUE DATE:	7/2/21
BETA JOB NO.:	6050

SCALE

AS SHOWN

UNLESS OTHERWISE NOTED OR CHANGED BY REPRODUCTION

SHEET NO.

H-9.1

6/30/2021 10:00 AM W:\T-PROJECTS\T-18009.00 - TAUNTON WWTF UPGRADES\HVAC DEPARTMENT\PHASE 1\18009.00 HVAC CONTROL ADMIN BUILDING-PHASE 1.DWG (BETA STB BW.STB)

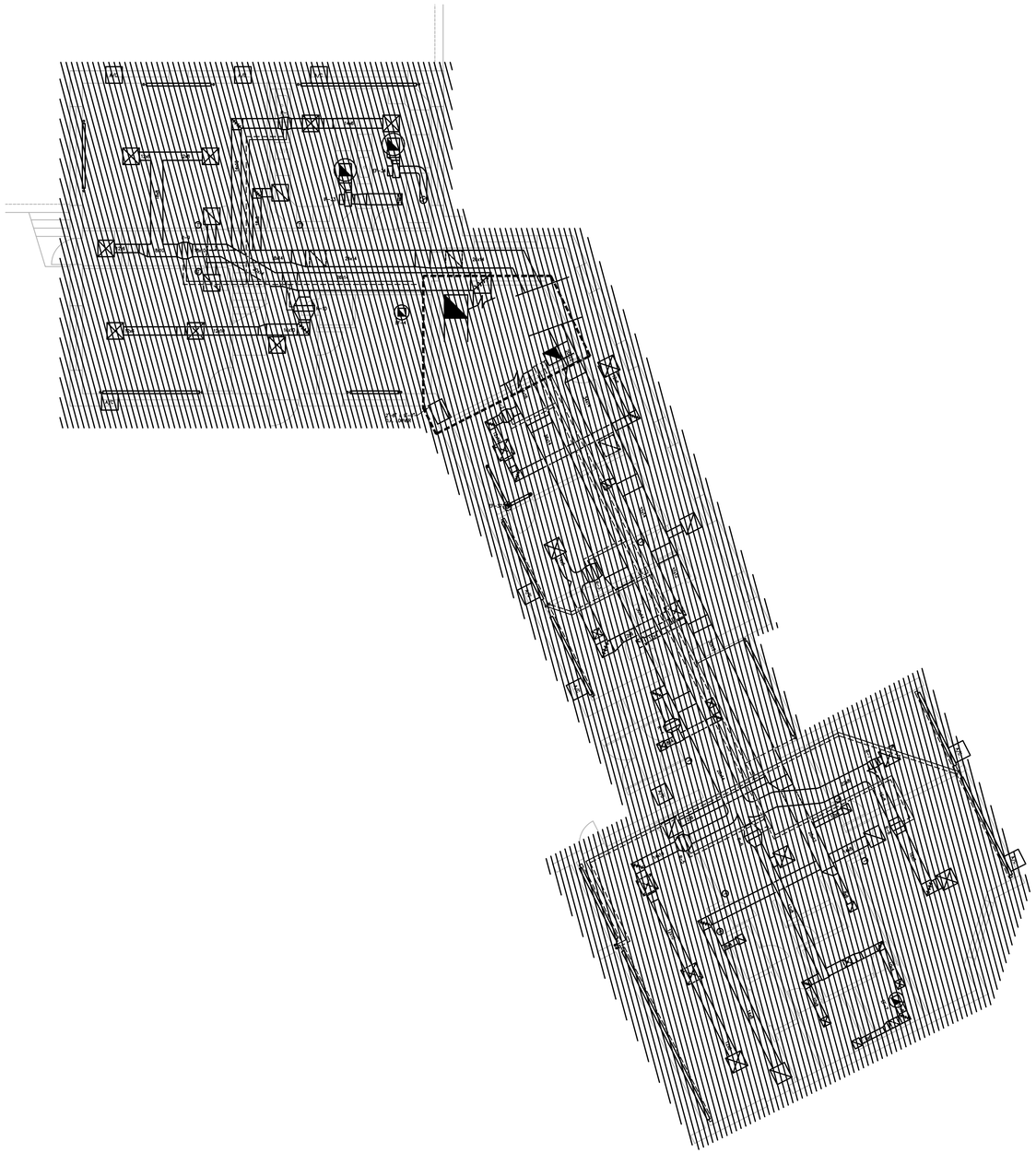

FIRST FLOOR - PLAN

SCALE: 1/8"= 1'-0"

PREPARED BY

BETA
www.BETA-Inc.com

REGISTERED PROFESSIONAL

COMMONWEALTH OF MASSACHUSETTS
ROBERTA L. BROWN
MECHANICAL
No. 45505
REGISTERED PROFESSIONAL ENGINEER

SUBCONSULTANT

SAR ENGINEERING, INC.

Mechanical/Electrical Engineers
150 Grossman Drive, Suite 309
Braintree, Massachusetts 02184
617 328-9215
web: www.sar.com

PROJECT

Taunton Wastewater Treatment Facility Improvements Phase 1

Taunton, MA

TITLE

Hvac Demolition Control & Admin. Building First Floor Plan

NO.	REVISIONS	DATE

DRAWN BY:	RLB
DESIGNED BY:	RHB
CHECKED BY:	RHB
ISSUE DATE:	7/2/21
BETA JOB NO.:	6050

SCALE

AS SHOWN

UNLESS OTHERWISE NOTED OR CHANGED BY REPRODUCTION

SHEET NO.

H-9.2

6/30/2021 10:01 AM W:\T-PROJECTS\T-18009.00 - TAUNTON WWTF UPGRADES\HVAC DEPARTMENT\PHASE 1\18009.00 HVAC CONTROL-ADMIN BUILDING-PHASE 1.DWG (BETA STB BW.STB)

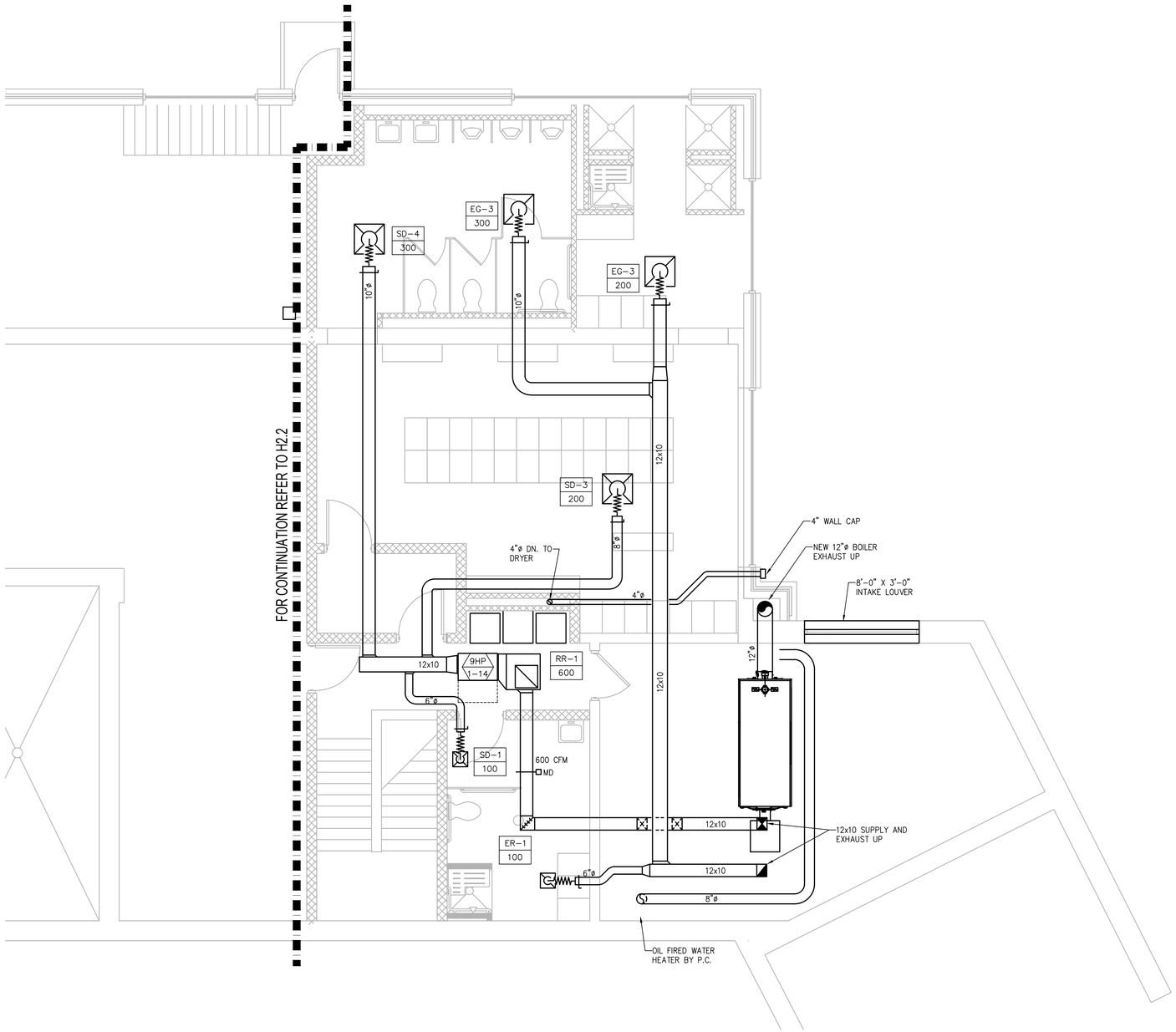

BASEMENT FLOOR - PLAN

SCALE: 1/8"= 1'-0"

PREPARED BY

BETA
www.BETA-Inc.com

REGISTERED PROFESSIONAL

COMMONWEALTH OF MASSACHUSETTS
ROBERT H. BROWN
MECHANICAL
NO. 45505
REGISTERED PROFESSIONAL ENGINEER

SUBCONSULTANT

SAR ENGINEERING, INC.
Mechanical/Electrical Engineers
150 Grossman Drive, Suite 309
Braintree, Massachusetts 02184
617 328-9215
web: www.sar.com

PROJECT

Taunton Wastewater Treatment Facility Improvements Phase 1

Taunton, MA

TITLE

Hvac Control & Admin. Building Basement Ductwork Plan

NO.	REVISIONS	DATE

DRAWN BY:	RLB
DESIGNED BY:	RHB
CHECKED BY:	RHB
ISSUE DATE:	7/2/21
BETA JOB NO.:	6050

SCALE

AS SHOWN

UNLESS OTHERWISE NOTED OR CHANGED BY REPRODUCTION

SHEET NO.

H-9.3

6/30/2021 10:01 AM W:\T-PROJECTS\T-18009.00 - TAUNTON WWTF UPGRADES\HVAC DEPARTMENT\PHASE 1\18009.00 HVAC CONTROL-ADMIN BUILDING-PHASE 1.DWG (BETA STB BW.STB)

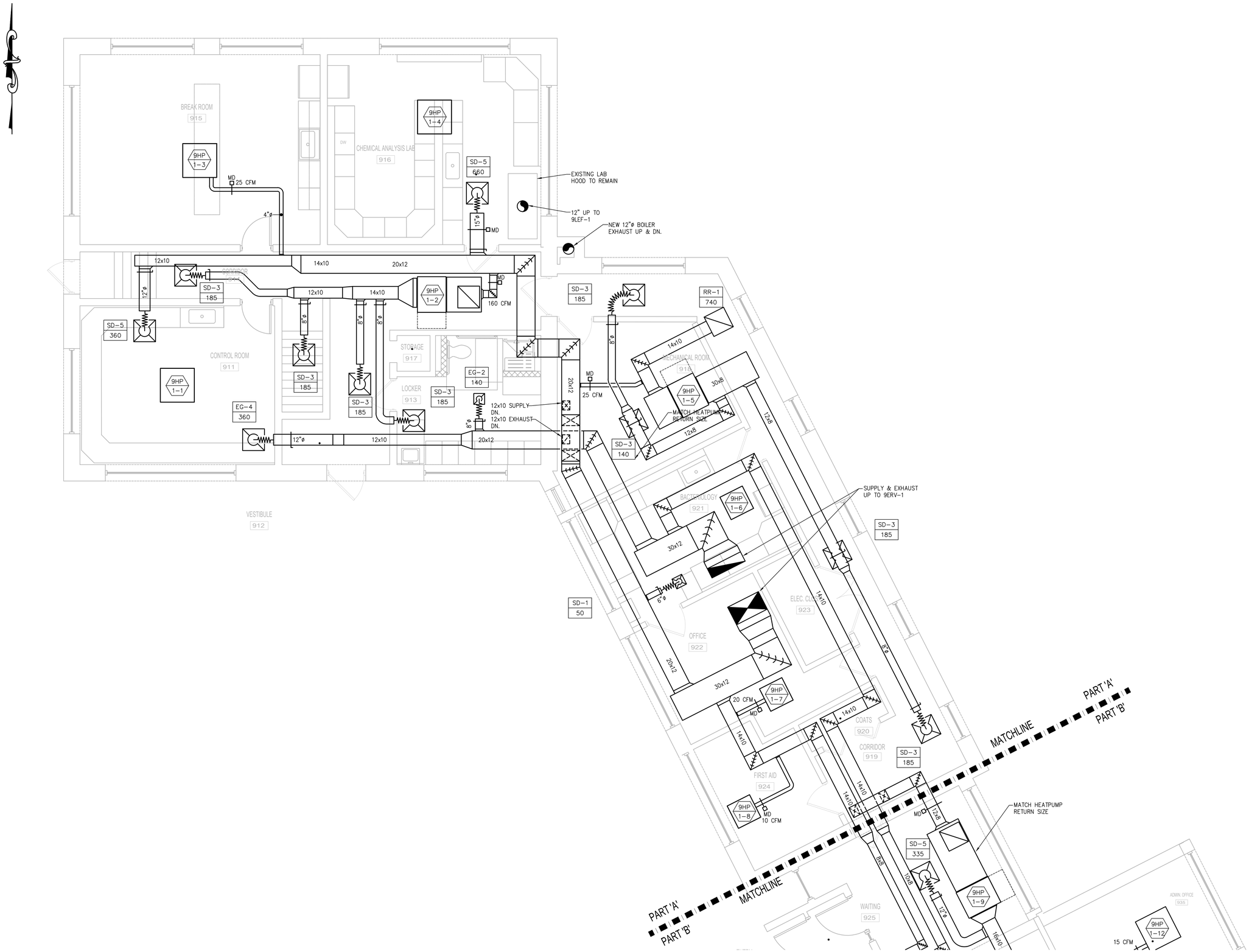

FIRST FLOOR - PLAN I

SCALE: 1/4"= 1'-0"

PREPARED BY

BETA
www.BETA-Inc.com

REGISTERED PROFESSIONAL

COMMONWEALTH OF MASSACHUSETTS
ROBERT L. BRUNN
MECHANICAL
NO. 45505
REGISTERED PROFESSIONAL ENGINEER

SUBCONSULTANT

SAR ENGINEERING, INC.

Mechanical/Electrical Engineers
150 Grossman Drive, Suite 309
Braintree, Massachusetts 02184
617 328-9215
web: www.sar.com

PROJECT

Taunton Wastewater Treatment Facility Improvements Phase 1

Taunton, MA

TITLE

Hvac Control & Admin. Building First Floor Ductwork Part Plan

NO.	REVISIONS	DATE

DRAWN BY:	RLB
DESIGNED BY:	RHB
CHECKED BY:	RHB
ISSUE DATE:	7/2/21
BETA JOB NO.:	6050

SCALE

AS SHOWN

UNLESS OTHERWISE NOTED OR CHANGED BY REPRODUCTION

SHEET NO.

H-9.4

6/30/2021 10:01 AM W:\T-PROJECTS\T-18009.00 - TAUNTON WWTF UPGRADES\HVAC DEPARTMENT\PHASE 1\18009.00 HVAC CONTROL-ADMIN BUILDING-PHASE 1.DWG (BETA STB BW.STB)

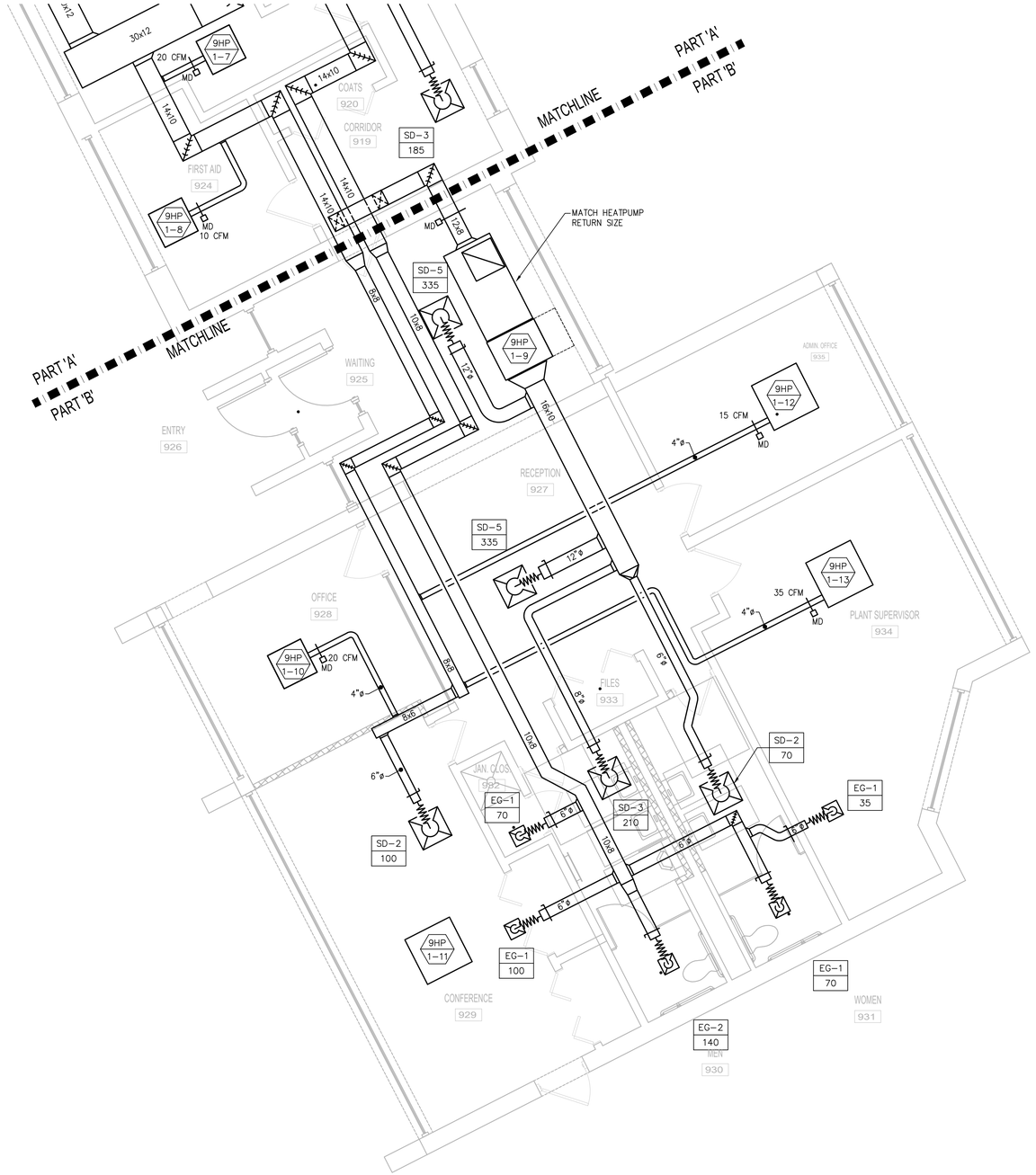

FIRST FLOOR - PLAN I

SCALE: 1/4"= 1'-0"

PREPARED BY

BETA
www.BETA-Inc.com

REGISTERED PROFESSIONAL

COMMONWEALTH OF MASSACHUSETTS
RICHARD H. BROWN
MECHANICAL
NO. 45505
REGISTERED PROFESSIONAL ENGINEER

SUBCONSULTANT

SAR ENGINEERING, INC.

Mechanical/Electrical Engineers
150 Grossman Drive, Suite 309
Braintree, Massachusetts 02184
617 328-9215
web: www.sar.com

PROJECT

Taunton Wastewater Treatment Facility Improvements Phase 1

Taunton, MA

TITLE

Hvac Control & Admin. Building First Floor Ductwork Part Plan

NO.	REVISIONS	DATE

DRAWN BY:	RLB
DESIGNED BY:	RHB
CHECKED BY:	RHB
ISSUE DATE:	7/2/21
BETA JOB NO.:	6050

SCALE

AS SHOWN

UNLESS OTHERWISE NOTED OR CHANGED BY REPRODUCTION

SHEET NO.

H-9.5

6/30/2021 10:01 AM W:\T-PROJECTS\T-18009.00 - TAUNTON WWTF UPGRADES\HVAC DEPARTMENT\PHASE 1\18009.00 HVAC CONTROL-ADMIN BUILDING-PHASE 1.DWG (BETA STB BW.STB)

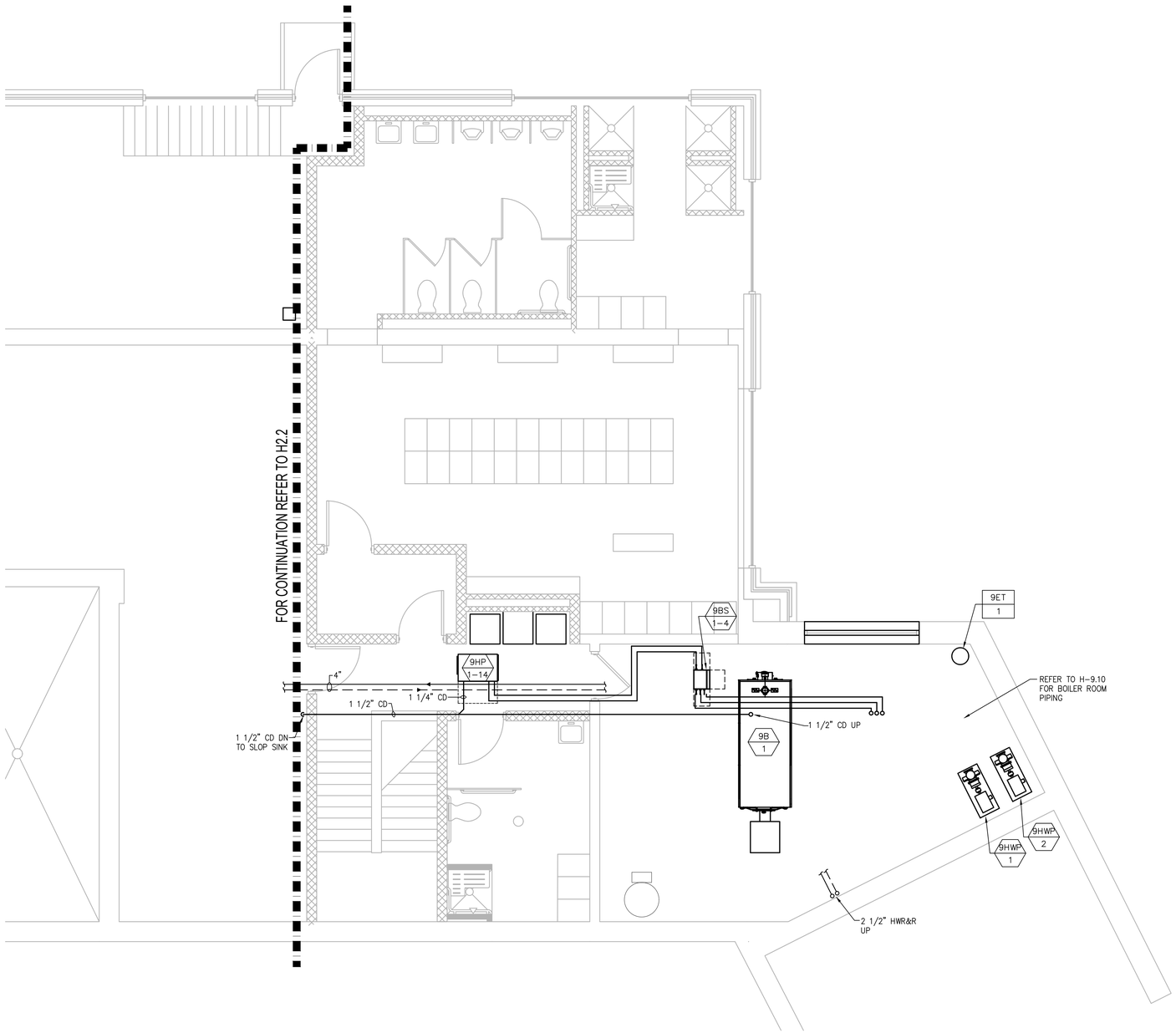

BASEMENT FLOOR - PLAN

SCALE: 1/8"= 1'-0"

PREPARED BY

BETA
www.BETA-Inc.com

REGISTERED PROFESSIONAL

COMMONWEALTH OF MASSACHUSETTS
RICHARD
BROWN
MECHANICAL
NO. 45505
REGISTERED
PROFESSIONAL ENGINEER

SUBCONSULTANT

SAR
ENGINEERING, INC.

Mechanical/Electrical Engineers
150 Grossman Drive, Suite 309
Braintree, Massachusetts 02184
617 328-9215
web: www.sar.com

PROJECT

Taunton Wastewater Treatment Facility Improvements Phase 1

Taunton, MA

TITLE

Hvac Control & Admin. Building Basement Piping Plan

NO.	REVISIONS	DATE

DRAWN BY:	RLB
DESIGNED BY:	RHB
CHECKED BY:	RHB
ISSUE DATE:	7/2/21
BETA JOB NO.:	6050

SCALE

AS SHOWN

UNLESS OTHERWISE NOTED OR CHANGED BY REPRODUCTION

SHEET NO.

H-9.6

6/30/2021 10:01 AM W:\T-PROJECTS\T-18009.00 - TAUNTON WWTF UPGRADES\HVAC DEPARTMENT\PHASE 1\18009.00 HVAC CONTROL-ADMIN BUILDING-PHASE 1.DWG (BETA STB BW.STB)

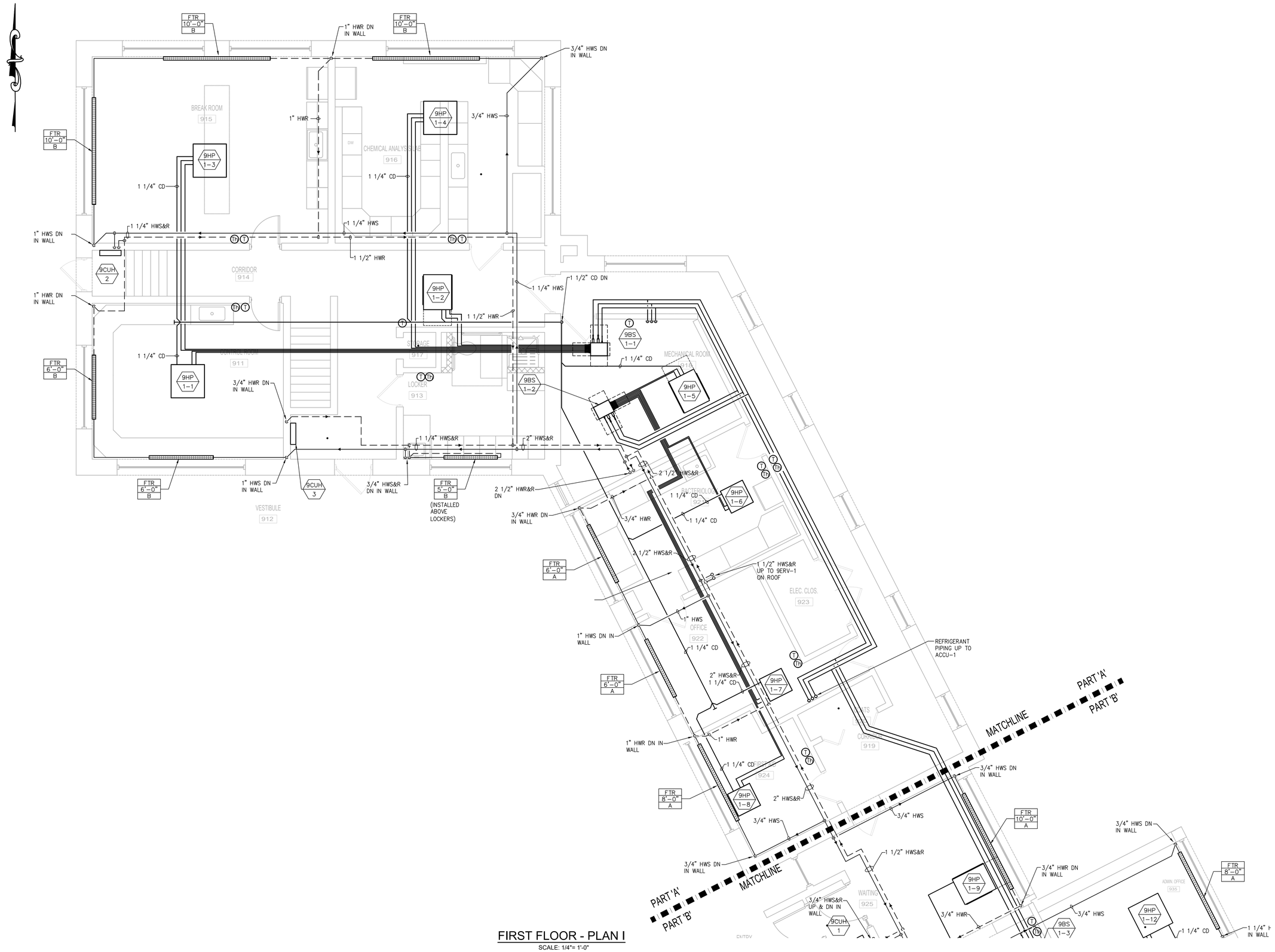

FIRST FLOOR - PLAN I

SCALE: 1/4"= 1'-0"

PREPARED BY

BETA
www.BETA-Inc.com

REGISTERED PROFESSIONAL

COMMONWEALTH OF MASSACHUSETTS
ROBERTA L. BRONN
MECHANICAL
NO. 45505
REGISTERED PROFESSIONAL ENGINEER

SUBCONSULTANT

SAR ENGINEERING, INC.

Mechanical/Electrical Engineers
150 Grossman Drive, Suite 309
Braintree, Massachusetts 02184
617 328-9215
web: www.sar.com

PROJECT

Taunton Wastewater Treatment Facility Improvements Phase 1

Taunton, MA

TITLE

Hvac Control & Admin. Building First Floor Piping Part Plan

NO.	REVISIONS	DATE

DRAWN BY:	RLB
DESIGNED BY:	RHB
CHECKED BY:	RHB
ISSUE DATE:	7/2/21
BETA JOB NO.:	6050

SCALE

AS SHOWN

UNLESS OTHERWISE NOTED OR CHANGED BY REPRODUCTION

SHEET NO.

H-9.7

6/30/2021 10:02 AM W:\T-PROJECTS\T-18009.00 - TAUNTON WWTF UPGRADES\HVAC DEPARTMENT\PHASE 1\18009.00 HVAC CONTROL-ADMIN BUILDING-PHASE 1.DWG (BETA STB BW.STB)

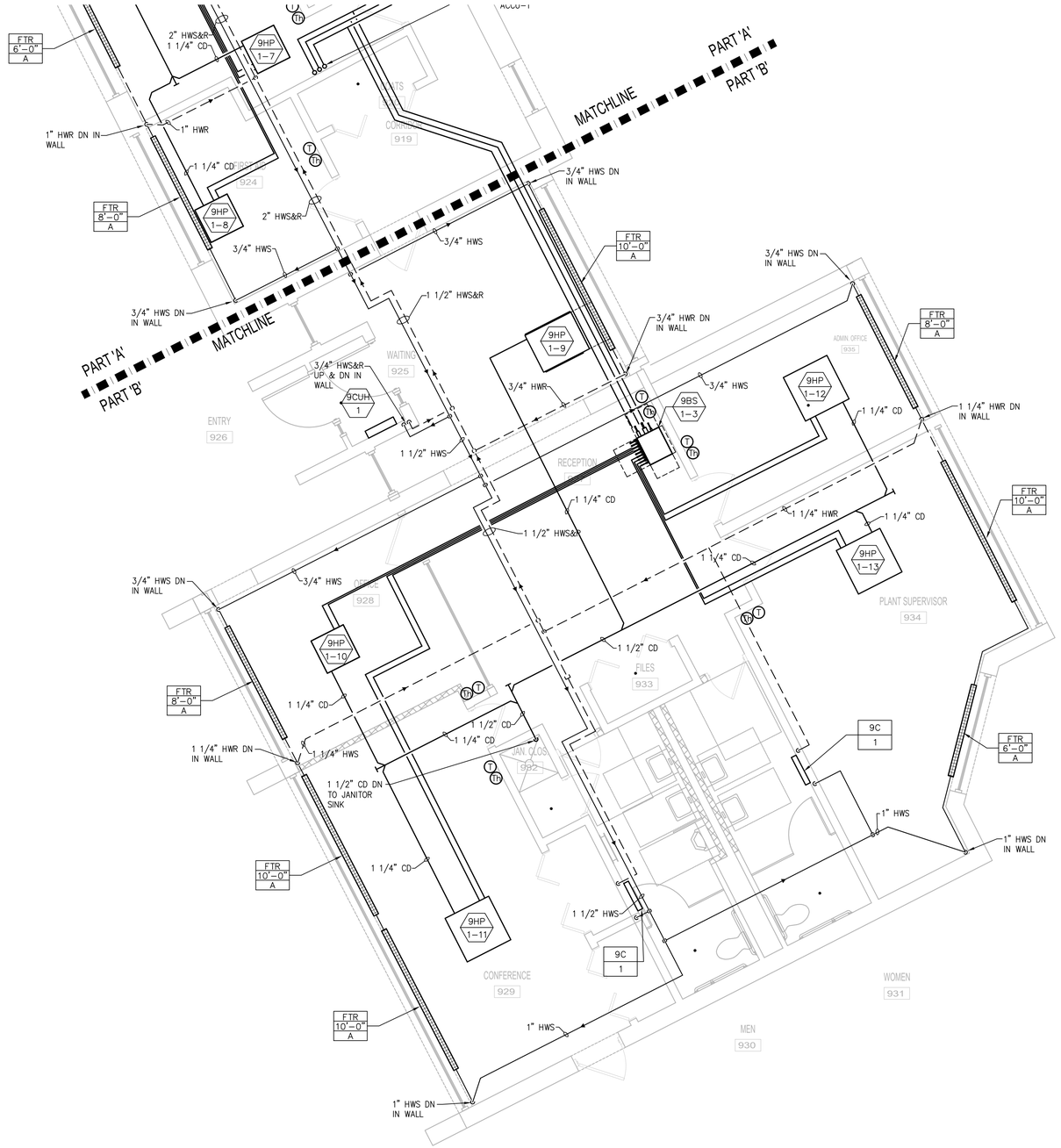

FIRST FLOOR - PLAN I

SCALE: 1/4"= 1'-0"

PREPARED BY

BETA
www.BETA-Inc.com

REGISTERED PROFESSIONAL

COMMONWEALTH OF MASSACHUSETTS
RICHARD H. BROWN
MECHANICAL
NO. 45505
REGISTERED PROFESSIONAL ENGINEER

SUBCONSULTANT

SAR ENGINEERING, INC.
Mechanical/Electrical Engineers
150 Grossman Drive, Suite 309
Braintree, Massachusetts 02184
617 328-9215
web: www.sar.com

PROJECT

Taunton Wastewater Treatment Facility Improvements Phase 1

Taunton, MA

TITLE

Hvac Control & Admin. Building First Floor Piping Part Plan

NO.	REVISIONS	DATE

DRAWN BY:	RLB
DESIGNED BY:	RHB
CHECKED BY:	RHB
ISSUE DATE:	7/2/21
BETA JOB NO.:	6050

SCALE

AS SHOWN

UNLESS OTHERWISE NOTED OR CHANGED BY REPRODUCTION

SHEET NO.

H-9.8

6/30/2021 10:02 AM W:\T-PROJECTS\T-18009.00 - TAUNTON WWTF UPGRADES\HVAC DEPARTMENT\PHASE 1\18009.00 HVAC CONTROL-ADMIN BUILDING-PHASE 1.DWG (BETA STB BW.STB)

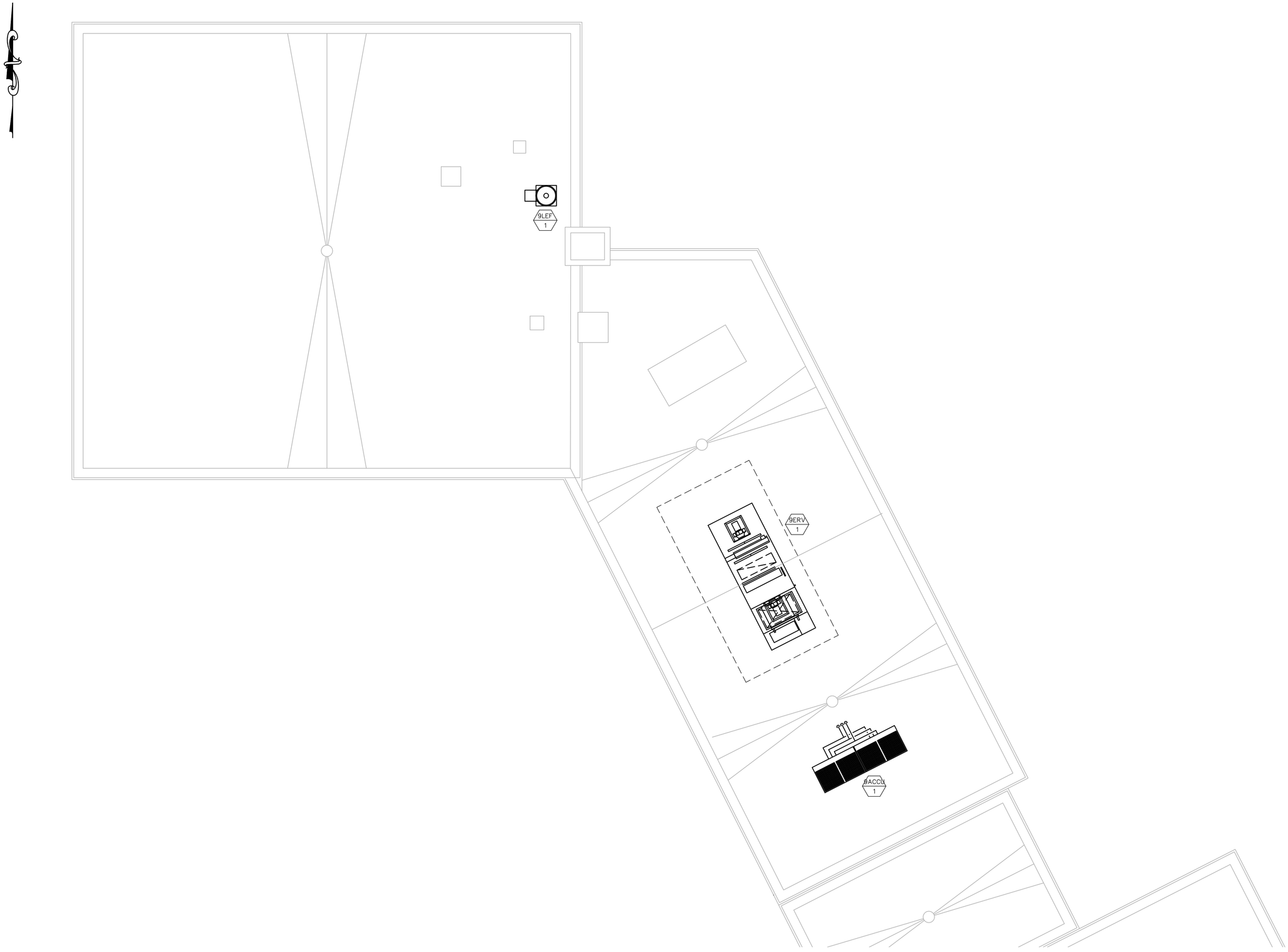

ROOF - PLAN I

SCALE: 1/4"= 1'-0"

PREPARED BY

BETA

www.BETA-Inc.com

REGISTERED PROFESSIONAL

COMMONWEALTH OF MASSACHUSETTS
RICHARD H. BROWN
MECHANICAL
No. 45505
REGISTERED PROFESSIONAL ENGINEER

SUBCONSULTANT

SAR ENGINEERING, INC.

Mechanical/Electrical Engineers
150 Grossman Drive, Suite 309
Braintree, Massachusetts 02184
617 328-9215
web: www.sar.com

PROJECT

Taunton Wastewater Treatment Facility Improvements Phase 1

Taunton, MA

TITLE

Hvac Control & Admin. Building Roof Plan

NO.	REVISIONS	DATE

DRAWN BY:	RLB
DESIGNED BY:	RHB
CHECKED BY:	RHB
ISSUE DATE:	7/2/21
BETA JOB NO.:	6050

SCALE

AS SHOWN

UNLESS OTHERWISE NOTED OR CHANGED BY REPRODUCTION

SHEET NO.

H-9.9

6/30/2021 10:02 AM W:\T-PROJECTS\T-18009.00 - TAUNTON WWTF UPGRADES\HVAC DEPARTMENT\PHASE 1\18009.00 HVAC CONTROL-ADMIN BUILDING-PHASE 1.DWG (BETA STB BW.STB)

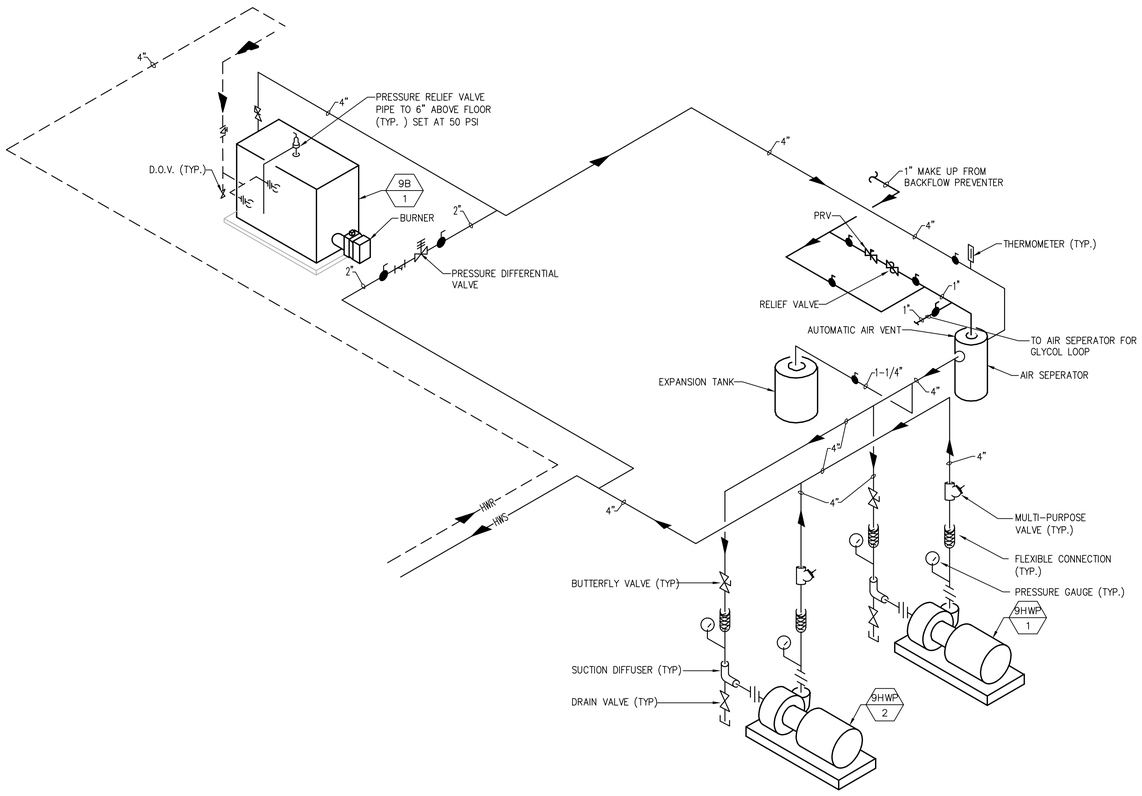

PIPING SCHEMATIC

NO SCALE

PREPARED BY

BETA

www.BETA-Inc.com

REGISTERED PROFESSIONAL

COMMONWEALTH OF MASSACHUSETTS
RICHARD H. BROWN
MECHANICAL
MECL 45505
REGISTERED PROFESSIONAL ENGINEER

SUBCONSULTANT

SAR ENGINEERING, INC.

Mechanical/Electrical Engineers
150 Grossman Drive, Suite 309
Braintree, Massachusetts 02184
617 328-9215
web: www.sar.com

PROJECT

Taunton Wastewater Treatment Facility Improvements Phase 1

Taunton, MA

TITLE

Hvac Control & Admin. Building Boiler Room Piping Schematic

NO.	REVISIONS	DATE

DRAWN BY:	RLB
DESIGNED BY:	RHB
CHECKED BY:	RHB
ISSUE DATE:	7/2/21
BETA JOB NO.:	6050

SCALE

AS SHOWN

UNLESS OTHERWISE NOTED OR CHANGED BY REPRODUCTION

SHEET NO.

H-9.10

6/30/2021 10:02 AM W:\T-PROJECTS\T-18009.00 - TAUNTON WWTF UPGRADES\HVAC DEPARTMENT\PHASE 1\18009.00 HVAC CONTROL-ADMIN BUILDING-PHASE 1.DWG (BETA STB BW.STB)