PIPE SCHEDULE

FLOW STREAM	ABBREVIATION	LOCATION	SIZE	MATERIAL	SCHEDULE/CLASS	LINING	JOINT TYPE	INSULATION	SPEC SECTION
BIOFILTER AIR	BFA	ABOVE GRADE	ALL	FRP	N/A	NONE	FLANGED	NONE	11961
		ALL	ALL	HDPE	DR17	NONE	BUTT FUSED	NONE	2620
CITY WATER	CW	BELOW GRADE	≤ 3"	COPPER	TYPE K	NONE	SOLDERED	NONE	11961
			> 3"	DUCTILE IRON	CLASS 52	CEMENT	MECHANICAL JOINT	NONE	11961
DRAIN	D	BELOW GRADE	ALL	PVC	SDR 35	NONE	PUSH ON	NONE	2625
INTERNAL RECYCLE	IR	ALL	ALL	DUCTILE IRON	CLASS 52	CEMENT	MECHANICAL JOINT	NONE	11961
LIME SLURRY	LS	ALL	ALL	PVC	SCH 80	NONE	SOLVENT WELD	NONE	11961
				HDPE	SDR 11	NONE	BUTT FUSED	NONE	2620
PLANT WATER	PW	INDOOR	≤ 3"	COPPER	TYPE K	NONE	SOLDERED	NONE	11961
		ALL	> 3"	DUCTILE IRON	CLASS 52	CEMENT	MECHANICAL JOINT	NONE	2618
POLYMER	PO	INDOOR	ALL	PVC	SCH 40	NONE	SOLVENT WELD	NONE	11961
PRIMARY EFFLUENT	PE	BELOW GRADE	ALL	DUCTILE IRON	CLASS 52	CEMENT	MECHANICAL JOINT	NONE	2618
PRIMARY INFLUENT	PI	BELOW GRADE	ALL	DUCTILE IRON	CLASS 52	CEMENT	MECHANICAL JOINT	NONE	2618
PRIMARY SLUDGE	PS	ABOVE GRADE	ALL	DUCTILE IRON	CLASS 52	GLASS	FLANGED	NONE	11961
		BELOW GRADE	ALL	DUCTILE IRON	CLASS 52	GLASS	MECHANICAL JOINT	NONE	11961
PROCESS AIR	PA	ALL	ALL	STAINLESS STEEL	SCH 10S	NONE	WELDED	NONE	15066
RETURN ACTIVATED SLUDGE	RAS	ABOVE GRADE	ALL	DUCTILE IRON	CLASS 52	GLASS	FLANGED	NONE	11961
		BELOW GRADE	ALL	DUCTILE IRON	CLASS 52	GLASS	MECHANICAL JOINT	NONE	2618
SANITARY FORCE MAIN	SFM	BELOW GRADE	ALL	PVC	SDR 21	NONE	PUSH ON	NONE	2625
SANITARY SEWER	SS	BELOW GRADE	ALL	PVC	SDR 35	NONE	PUSH ON	NONE	2622
SCUM	SC	ALL	ALL	DUCTILE IRON	CLASS 52	CEMENT	MECHANICAL JOINT	NONE	11961
SECONDARY EFFLUENT	SE	ALL	ALL	DUCTILE IRON	CLASS 52	CEMENT	MECHANICAL JOINT	NONE	11961
SODIUM BISULFITE	SB	ALL	ALL	PVC	SCH 80	NONE	SOLVENT WELD	INSUL. & HEAT TRACE	11961
SODIUM HYPOCHLORITE	SH	ALL	ALL	PVC	SCH 80	NONE	SOLVENT WELD	NONE	11961
				HDPE	SDR 11	NONE	BUTT FUSED	NONE	2620
THICKENED SLUDGE	TS	ABOVE GRADE	ALL	DUCTILE IRON	CLASS 52	GLASS	FLANGED	NONE	11961
		BELOW GRADE	ALL	DUCTILE IRON	CLASS 52	GLASS	MECHANICAL JOINT	NONE	11961
WASTE ACTIVATED SLUDGE	WAS	ABOVE GRADE	ALL	DUCTILE IRON	CLASS 52	GLASS	FLANGED	NONE	11961
		BELOW GRADE	ALL	DUCTILE IRON	CLASS 52	GLASS	MECHANICAL JOINT	NONE	2618

PREPARED BY

BETA
www.BETA-Inc.com

REGISTERED PROFESSIONAL

COMMONWEALTH OF MASSACHUSETTS
JOSEPH FEDERICO, JR.
No. 30663
REGISTERED PROFESSIONAL ENGINEER

SUBCONSULTANT

PROJECT

Taunton Wastewater Treatment Facility Improvements Phase 1

Taunton, MA

TITLE

Pipe Schedule

NO.	REVISIONS	DATE

DRAWN BY:	BM
DESIGNED BY:	MA
CHECKED BY:	SR
ISSUE DATE:	7/2/2021
BETA JOB NO.:	6050

SCALE

NONE

UNLESS OTHERWISE NOTED OR CHANGED BY REPRODUCTION

SHEET NO.

M-0.1

7/2/2021 10:33 AM J:\TAUNTON\WWTF DESIGN\AUTOCAD\PLAN SET\PHASE 1\PIPE SCHEDULE.DWG (BETA STD BW.CTB)

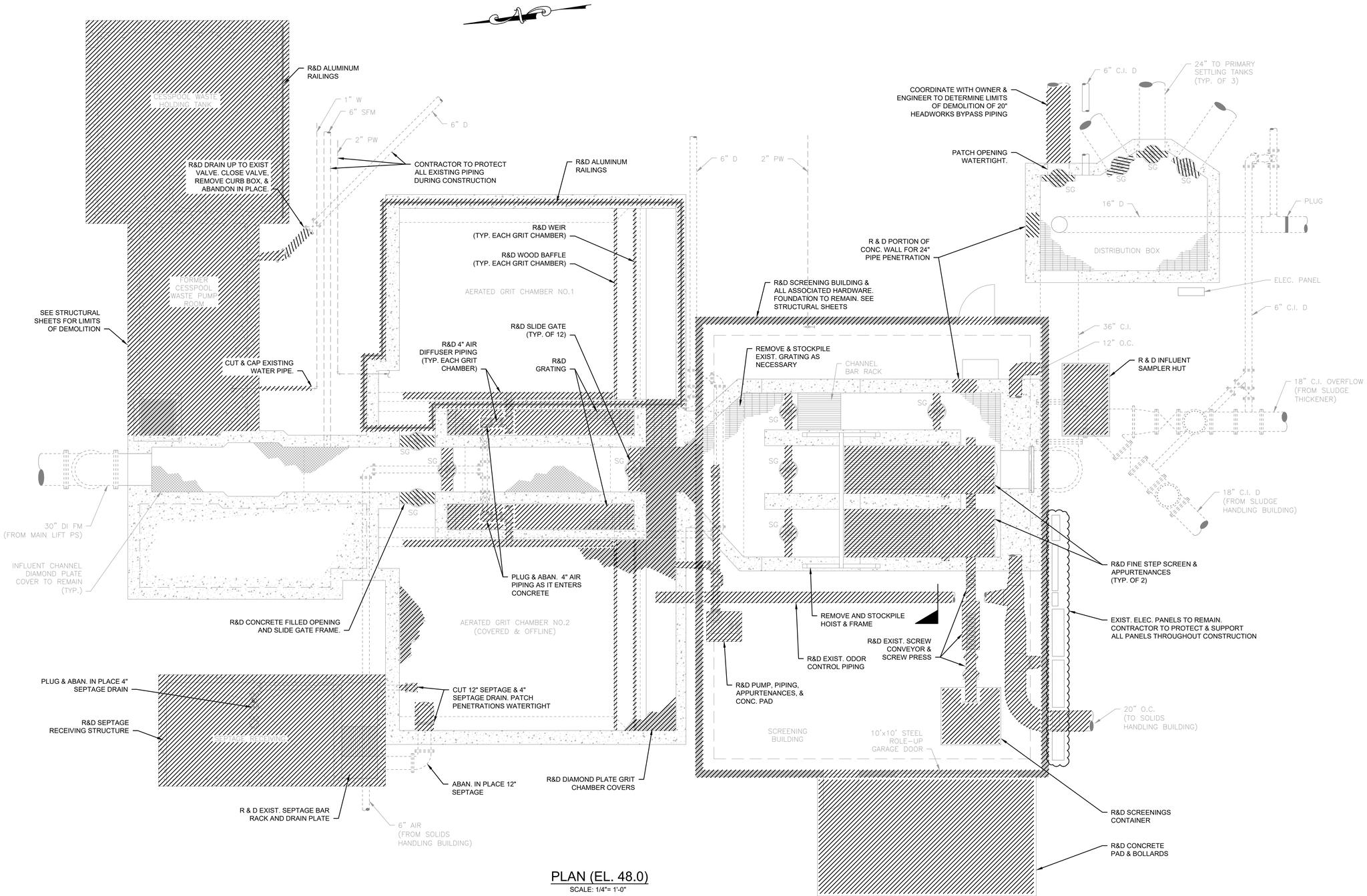

PLAN (EL. 48.0)

SCALE: 1/4"= 1'-0"

PREPARED BY

BETA
www.BETA-Inc.com

REGISTERED PROFESSIONAL

COMMONWEALTH OF MASSACHUSETTS
JOSEPH FEDERICO, JR.
No. 30663
REGISTERED PROFESSIONAL ENGINEER

SUBCONSULTANT

PROJECT

Taunton Wastewater Treatment Facility Improvements Phase 1

Taunton, MA

TITLE

Headworks Demolition Plan

NO.	REVISIONS	DATE

DRAWN BY:	BM
DESIGNED BY:	BM
CHECKED BY:	SR
ISSUE DATE:	7/2/2021
BETA JOB NO.:	6050

SCALE

AS SHOWN

UNLESS OTHERWISE NOTED OR CHANGED BY REPRODUCTION

SHEET NO.

M-1.1

7/2/2021 10:33 AM J:\TAUNTON\WWTF DESIGN\AUTOCAD\PLAN SET\PHASE 1\HEADWORKS - EXIST. PLANS & SECTIONS.DWG (BETA STD BW.CTB)

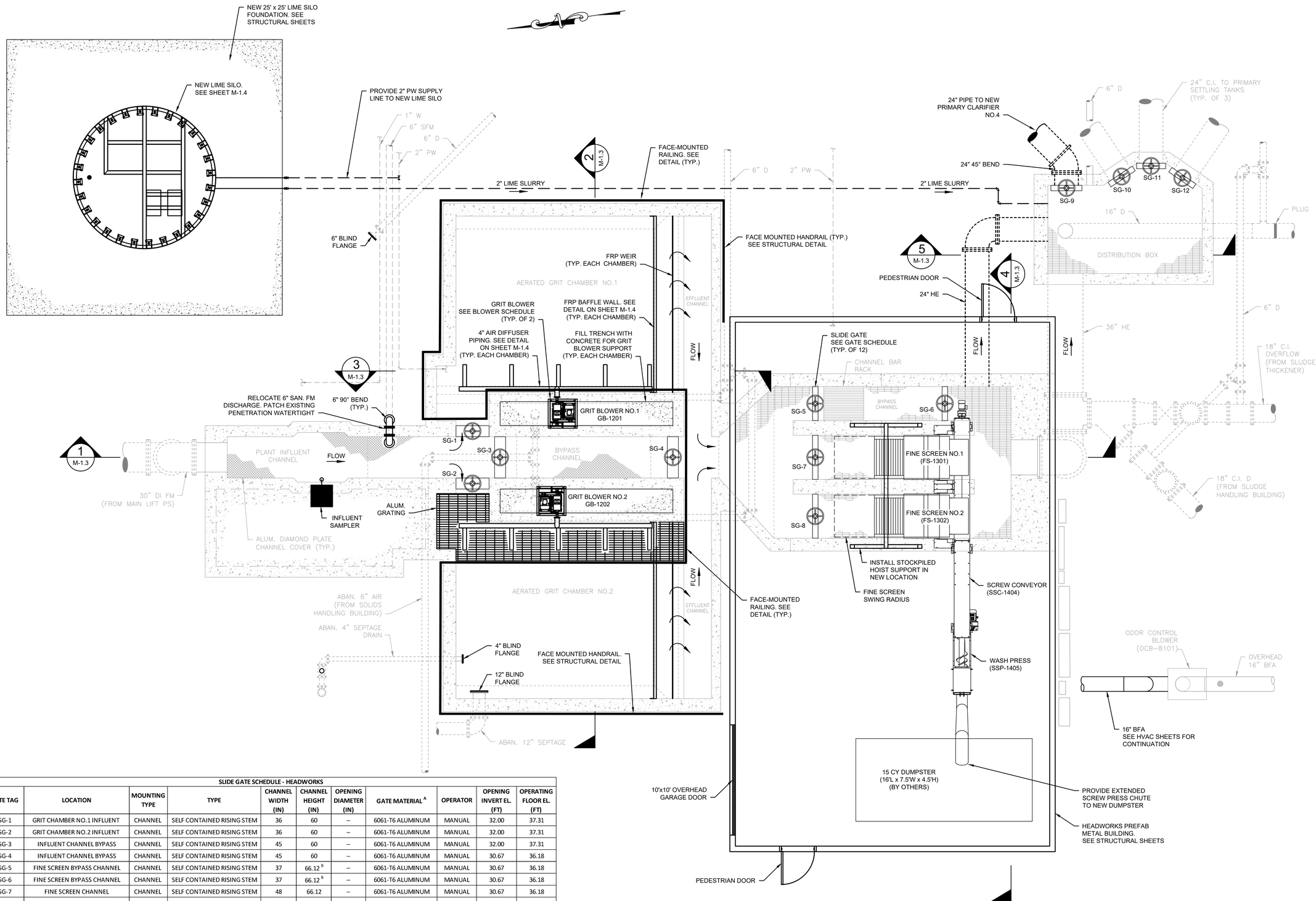

PLAN (EL. 48.0)

SCALE: 1/4"= 1'-0"

SLIDE GATE SCHEDULE - HEADWORKS

GATE TAG	LOCATION	MOUNTING TYPE	TYPE	CHANNEL WIDTH (IN)	CHANNEL HEIGHT (IN)	OPENING DIAMETER (IN)	GATE MATERIAL [A]	OPERATOR	OPENING INVERT EL. (FT)	OPERATING FLOOR EL. (FT)
SG-1	GRIT CHAMBER NO.1 INFLUENT	CHANNEL	SELF CONTAINED RISING STEM	36	60	–	6061-T6 ALUMINUM	MANUAL	32.00	37.31
SG-2	GRIT CHAMBER NO.2 INFLUENT	CHANNEL	SELF CONTAINED RISING STEM	36	60	–	6061-T6 ALUMINUM	MANUAL	32.00	37.31
SG-3	INFLUENT CHANNEL BYPASS	CHANNEL	SELF CONTAINED RISING STEM	45	60	–	6061-T6 ALUMINUM	MANUAL	32.00	37.31
SG-4	INFLUENT CHANNEL BYPASS	CHANNEL	SELF CONTAINED RISING STEM	45	60	–	6061-T6 ALUMINUM	MANUAL	30.67	36.18
SG-5	FINE SCREEN BYPASS CHANNEL	CHANNEL	SELF CONTAINED RISING STEM	37	66.12 [B]	–	6061-T6 ALUMINUM	MANUAL	30.67	36.18
SG-6	FINE SCREEN BYPASS CHANNEL	CHANNEL	SELF CONTAINED RISING STEM	37	66.12 [B]	–	6061-T6 ALUMINUM	MANUAL	30.67	36.18
SG-7	FINE SCREEN CHANNEL	CHANNEL	SELF CONTAINED RISING STEM	48	66.12	–	6061-T6 ALUMINUM	MANUAL	30.67	36.18
SG-8	FINE SCREEN CHANNEL	CHANNEL	SELF CONTAINED RISING STEM	48	66.12	–	6061-T6 ALUMINUM	MANUAL	30.67	36.18
SG-9	PRIMARY DISTRIBUTION BOX	WALL	SELF CONTAINED RISING STEM	–	–	24	6061-T6 ALUMINUM	MANUAL	23.70	35.25
SG-10	PRIMARY DISTRIBUTION BOX	WALL	SELF CONTAINED RISING STEM	–	–	24	6061-T6 ALUMINUM	MANUAL	23.70	35.25
SG-11	PRIMARY DISTRIBUTION BOX	WALL	SELF CONTAINED RISING STEM	–	–	24	6061-T6 ALUMINUM	MANUAL	23.70	35.25
SG-12	PRIMARY DISTRIBUTION BOX	WALL	SELF CONTAINED RISING STEM	–	–	24	6061-T6 ALUMINUM	MANUAL	23.70	35.25

[A] FRP SLIDE GATES WILL BE CONSIDERED PROVIDED THEY MEET PERFORMANCE SPECIFICATIONS

[B] SET TOP OF GATE AT EL. 34.7 TO PROVIDE 18-INCHES OF FREEBOARD

PREPARED BY

BETA
www.BETA-Inc.com

REGISTERED PROFESSIONAL

COMMONWEALTH OF MASSACHUSETTS
JOSEPH FEDERICO, JR.
No. 30663
REGISTERED PROFESSIONAL ENGINEER

SUBCONSULTANT

PROJECT

Taunton Wastewater Treatment Facility Improvements Phase 1

Taunton, MA

TITLE

Headworks Plan

NO.	REVISIONS	DATE

DRAWN BY:	BM
DESIGNED BY:	MA
CHECKED BY:	SR
ISSUE DATE:	7/2/2021
BETA JOB NO.:	6050

SCALE

AS SHOWN

UNLESS OTHERWISE NOTED OR CHANGED BY REPRODUCTION

SHEET NO.

M-1.2

7/2/2021 10:33 AM J:\TAUNTON\WWTF DESIGN\AUTOCAD\PLAN SET\PHASE 1\HEADWORKS - PROP. PLANS & SECTIONS.DWG (BETA STD BW.CTB)

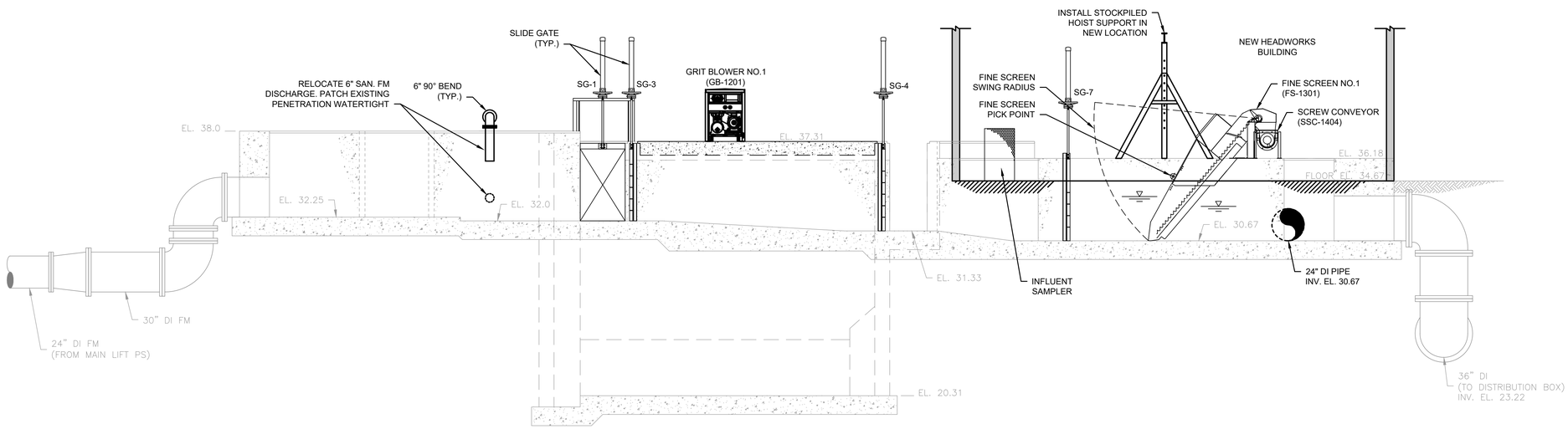

SECTION 1 (M-1.2)
SCALE: 1/4"= 1'-0"

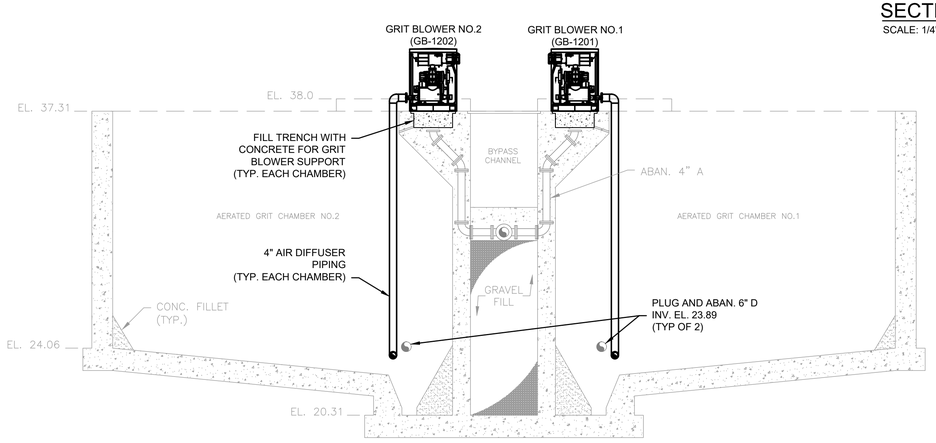

SECTION 2 (M-1.2)
SCALE: 1/4"= 1'-0"

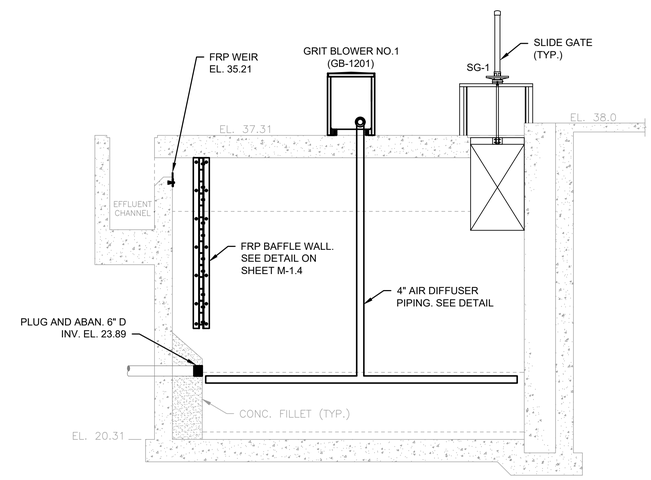

SECTION 3 (M-1.2)
SCALE: 1/4"= 1'-0"

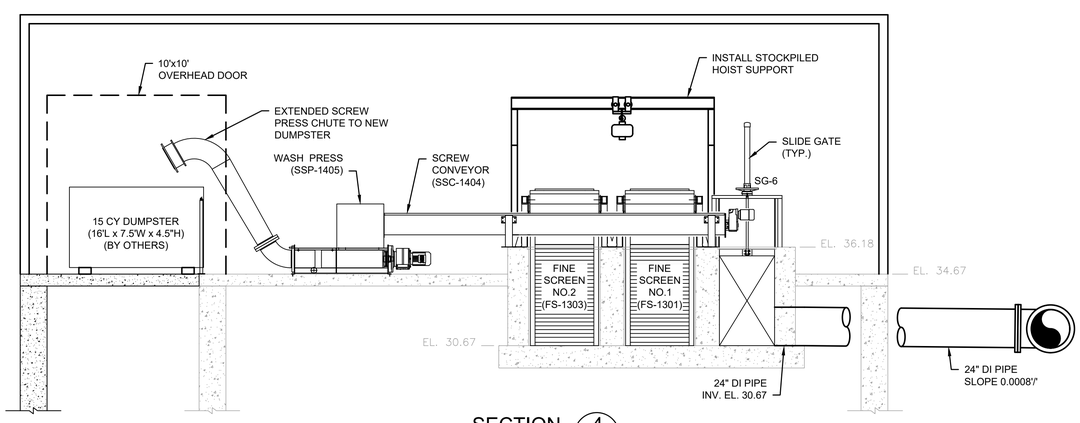

SECTION 4 (M-1.2)
SCALE: 1/4"= 1'-0"

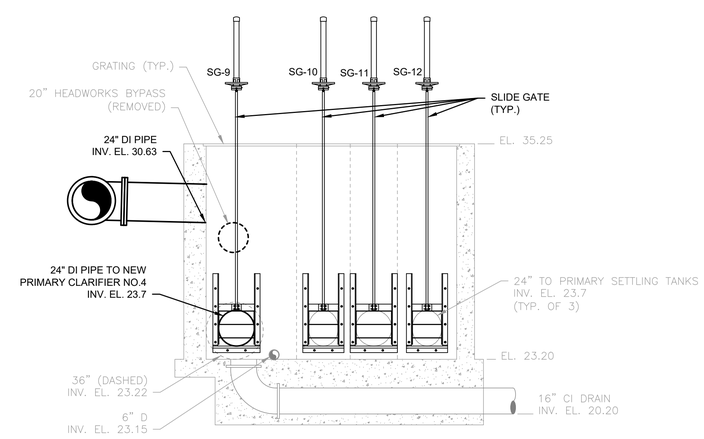

SECTION 5 (M-1.2)
SCALE: 1/4"= 1'-0"

PREPARED BY

BETA
www.BETA-Inc.com

REGISTERED PROFESSIONAL

COMMONWEALTH OF MASSACHUSETTS
JOSEPH FEDERICO, JR.
No. 30663
REGISTERED PROFESSIONAL ENGINEER

SUBCONSULTANT

PROJECT

Taunton Wastewater Treatment Facility Improvements Phase 1

Taunton, MA

TITLE

Headworks Sections

NO.	REVISIONS	DATE

DRAWN BY:	BM
DESIGNED BY:	MA
CHECKED BY:	SR
ISSUE DATE:	7/2/2021
BETA JOB NO.:	6050

SCALE

AS SHOWN

UNLESS OTHERWISE NOTED OR CHANGED BY REPRODUCTION

SHEET NO.

M-1.3

7/2/2021 10:33 AM J:\TAUNTON\WWTF DESIGN\AUTOCAD\PLAN SET\PHASE 1\HEADWORKS - PROP. PLANS & SECTIONS.DWG (BETA STD BW.CTB)

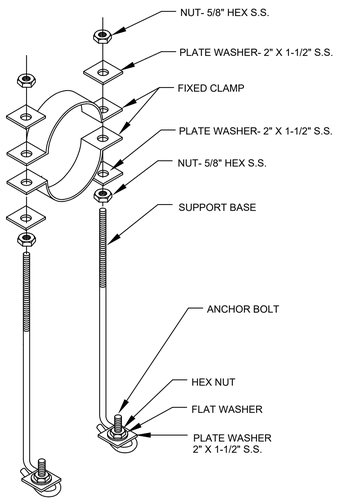

SIMPLE SUPPORT

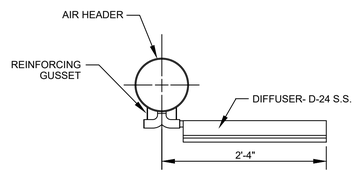

DIFFUSER BAND

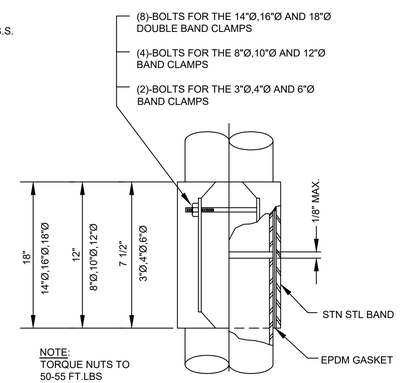

NOTE:
TORQUE NUTS TO 50-55 FT.LBS

CLAMP COUPLING

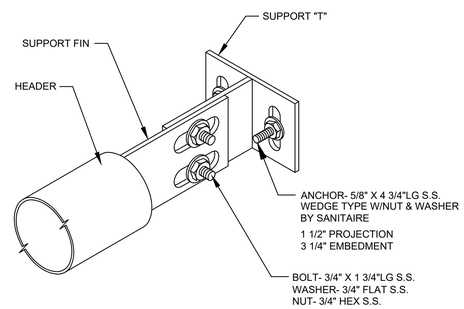

WALL MOUNT FIXED SUPPORT

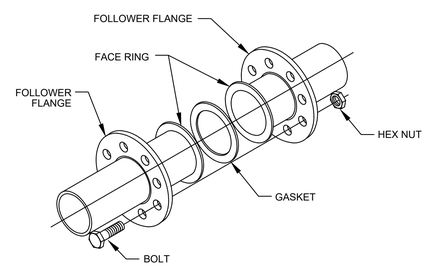

SANITAIRE FLANGE

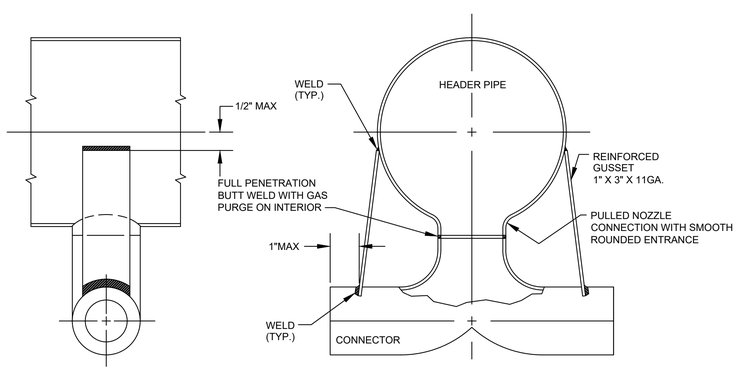

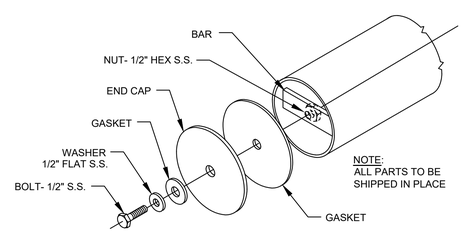

NOTE:
ALL PARTS TO BE SHIPPED IN PLACE

REMOVABLE END CAP

GRIT CHAMBER COARSE BUBBLE DIFFUSER

SCALE: NOT TO SCALE

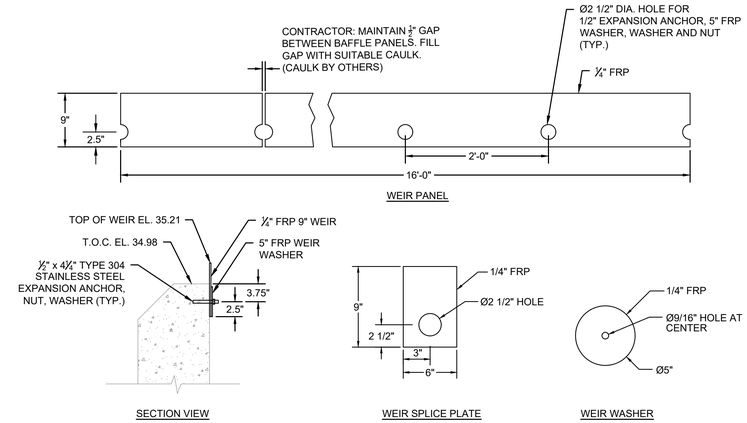

GRIT CHAMBER EFFLUENT WEIR

SCALE: NOT TO SCALE

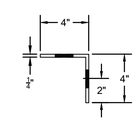

S.S. SUPPORT BRACKET
END VIEW
SCALE: NTS

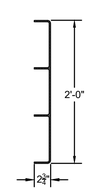

TYPICAL FRP BAFFLE PANEL
CROSS SECTION
SCALE: NTS

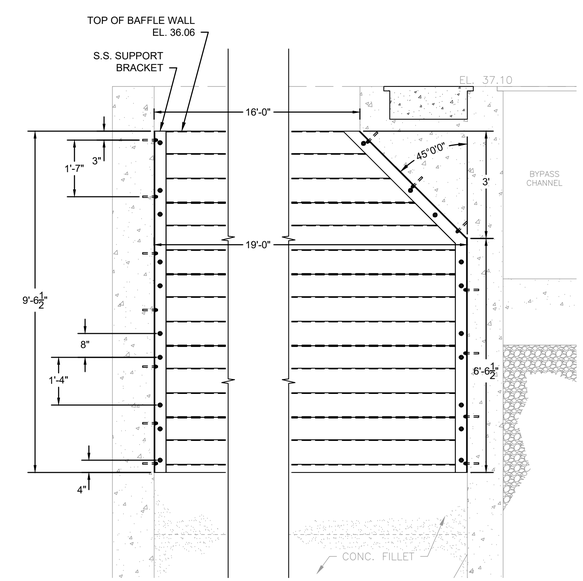

WALL SECTION VIEW
SCALE: 1/2" = 1'

GRIT CHAMBER BAFFLE WALL

SCALE: AS SHOWN

PREPARED BY

BETA
www.BETA-Inc.com

REGISTERED PROFESSIONAL

COMMONWEALTH OF MASSACHUSETTS
JOSEPH FEDERICO, JR.
No. 30663
REGISTERED PROFESSIONAL ENGINEER

SUBCONSULTANT

PROJECT

Taunton Wastewater Treatment Facility Improvements Phase 1

Taunton, MA

TITLE

Headworks Details

NO.	REVISIONS	DATE

DRAWN BY:	BM
DESIGNED BY:	MA
CHECKED BY:	SR
ISSUE DATE:	7/2/2021
BETA JOB NO.:	6050

SCALE

AS SHOWN

UNLESS OTHERWISE NOTED OR CHANGED BY REPRODUCTION

SHEET NO.

M-1.4

7/2/2021 10:33 AM J:\TAUNTON\WWTF DESIGN\AUTOCAD\PLAN SET\PHASE 1\HEADWORKS - PROP. PLANS & SECTIONS.DWG (BETA STD BW.CTB)

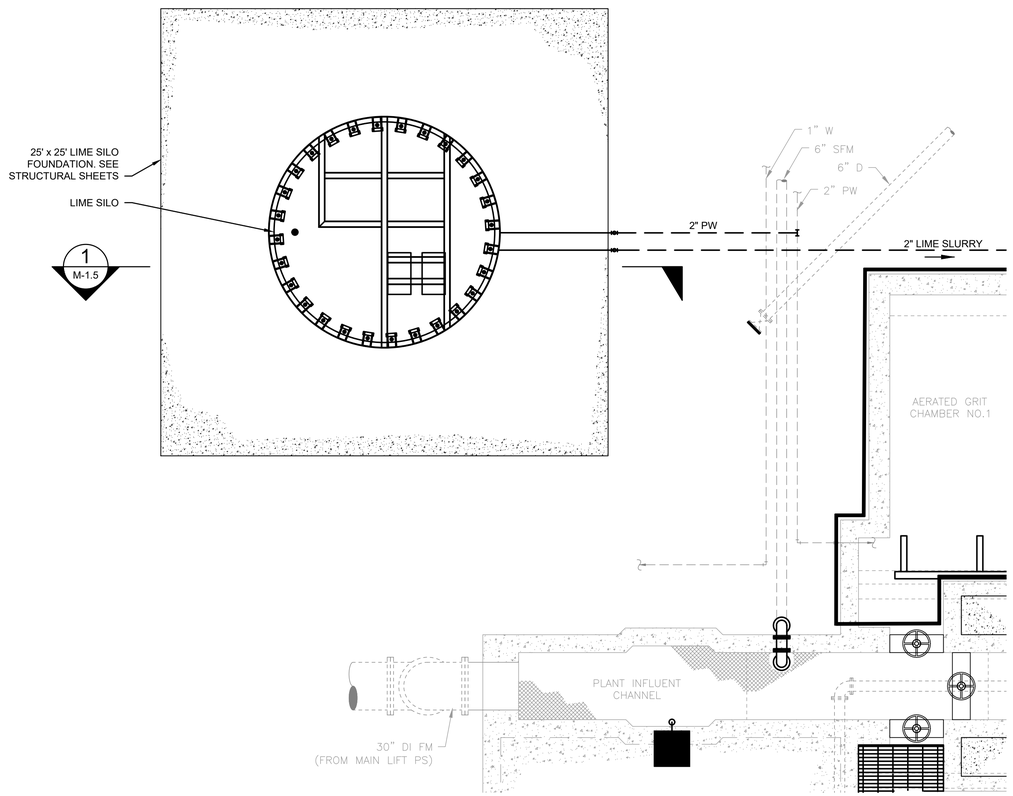

PLAN (EL. 48.0)

SCALE: 1/4"= 1'-0"

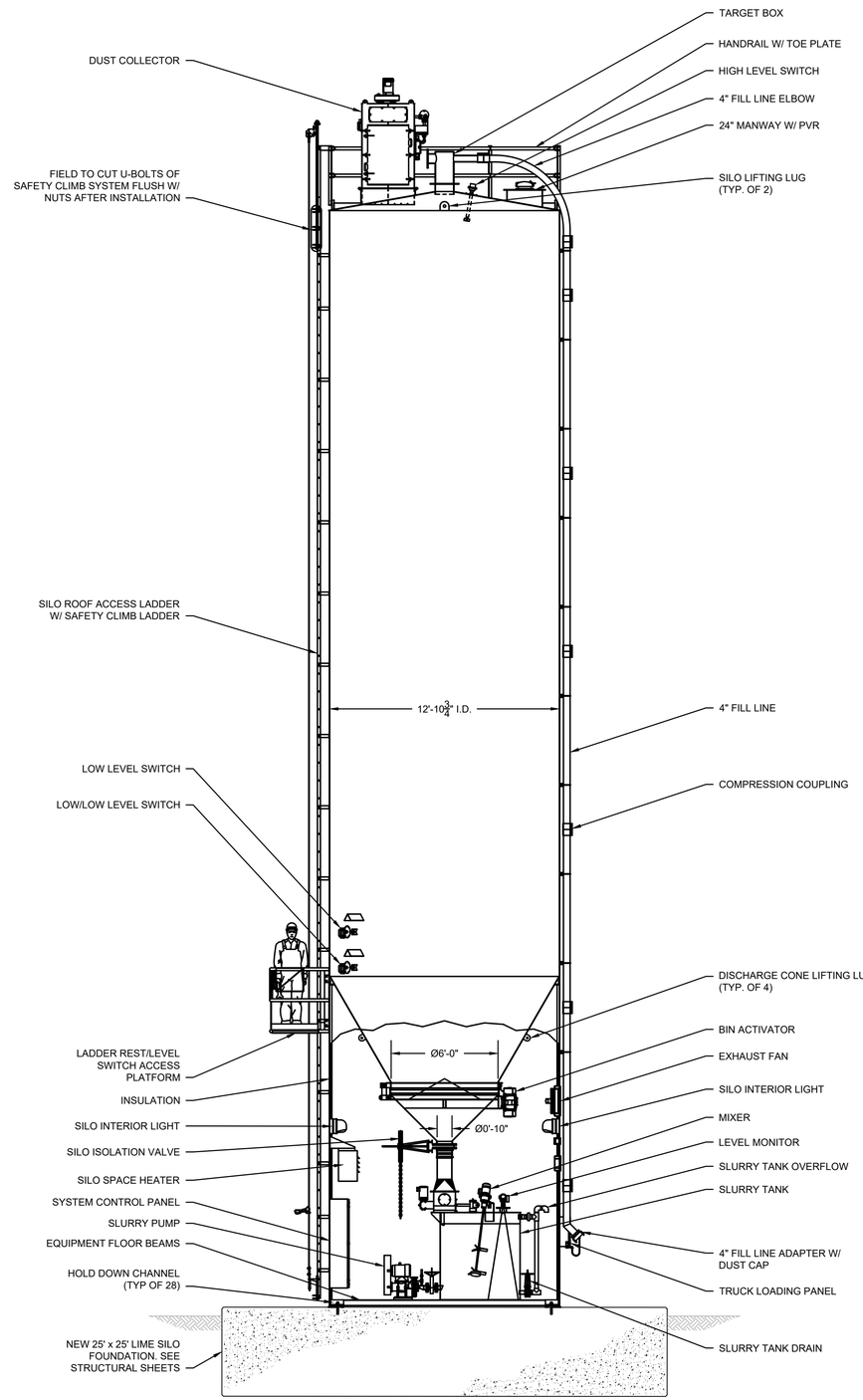

SECTION 1 M-1.5

SCALE: 1/4"= 1'-0"

PREPARED BY

BETA
www.BETA-Inc.com

REGISTERED PROFESSIONAL

COMMONWEALTH OF MASSACHUSETTS
JOSEPH FEDERICO, JR.
No. 30663
REGISTERED PROFESSIONAL ENGINEER

SUBCONSULTANT

PROJECT

Taunton Wastewater Treatment Facility Improvements Phase 1

Taunton, MA

TITLE

Lime Silo Plan & Section

NO.	REVISIONS	DATE

DRAWN BY:	BM
DESIGNED BY:	MA
CHECKED BY:	SR
ISSUE DATE:	7/2/2021
BETA JOB NO.:	6050

SCALE

AS SHOWN

UNLESS OTHERWISE NOTED OR CHANGED BY REPRODUCTION

SHEET NO.

M-1.5

7/2/2021 10:34 AM J:\TAUNTON\WWTF DESIGN\AUTOCAD\PLAN SET\PHASE 1\HEADWORKS - PROP. PLANS & SECTIONS.DWG (BETA STD BW CTB)

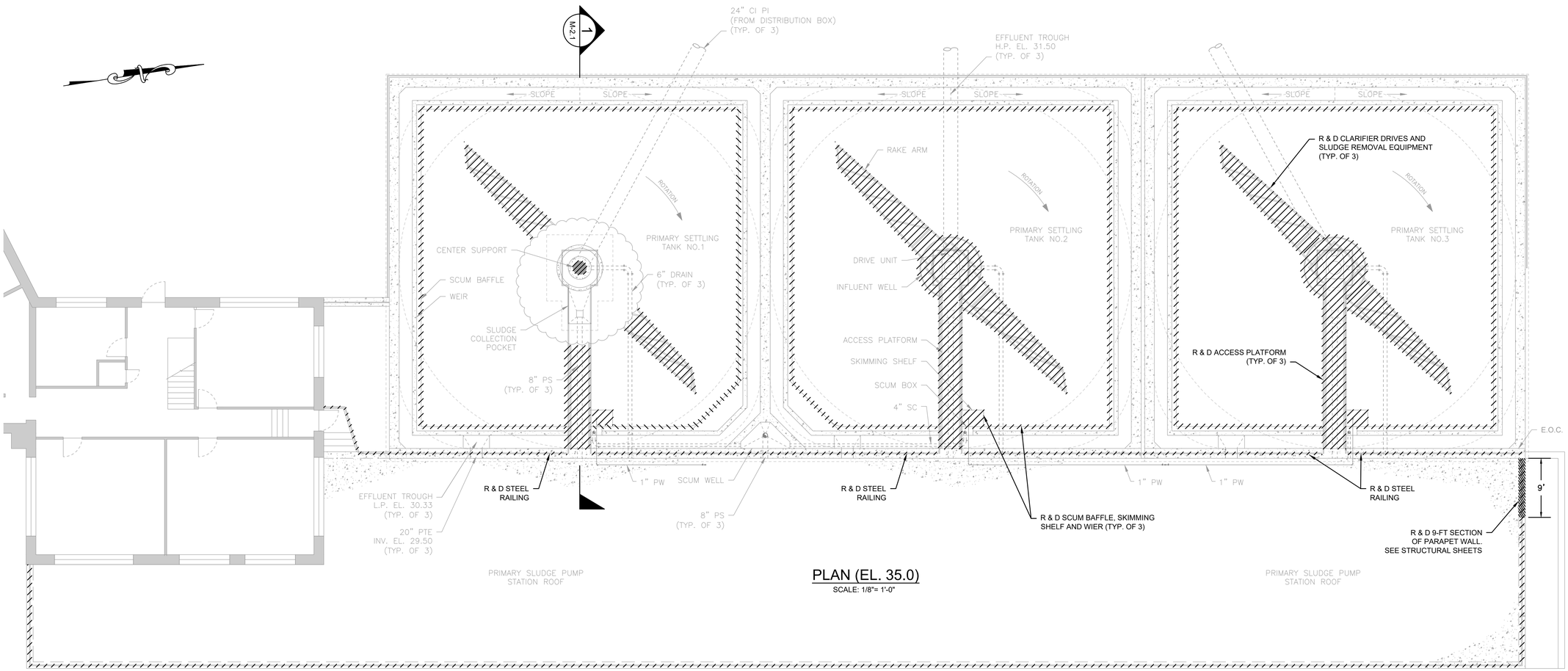

PLAN (EL. 35.0)

SCALE: 1/8"= 1'-0"

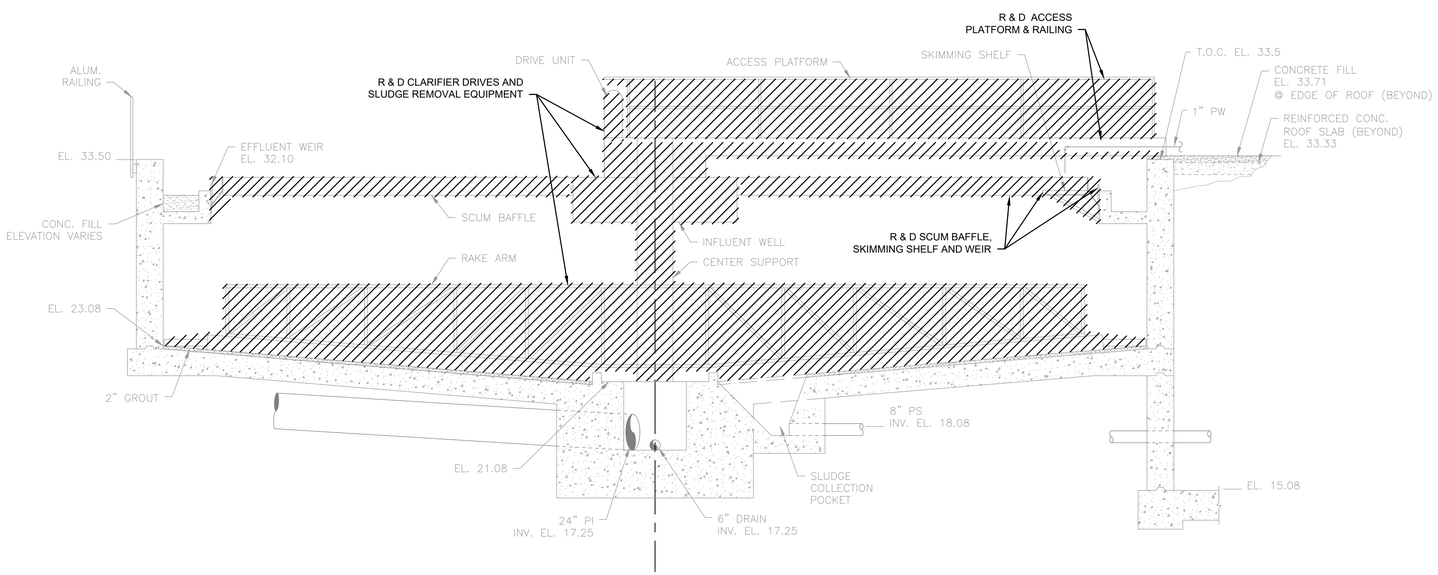

SECTION 1 / M-2.1

SCALE: 1/4"= 1'-0"

PREPARED BY

BETA
www.BETA-Inc.com

REGISTERED PROFESSIONAL

COMMONWEALTH OF MASSACHUSETTS
JOSEPH FEDERICO, JR.
No. 30663
REGISTERED PROFESSIONAL ENGINEER

SUBCONSULTANT

PROJECT

Taunton Wastewater Treatment Facility Improvements Phase 1

Taunton, MA

TITLE

Primary Clarifiers Demolition Plan & Section

NO.	REVISIONS	DATE

DRAWN BY:	BM
DESIGNED BY:	JD
CHECKED BY:	SR
ISSUE DATE:	7/2/2021
BETA JOB NO.:	6050

SCALE

AS SHOWN

UNLESS OTHERWISE NOTED OR CHANGED BY REPRODUCTION

SHEET NO.

M-2.1

7/2/2021 10:34 AM J:\TAUNTON\WWTF DESIGN\AUTOCAD\PLAN SET\PHASE 1\PRIMARY CLARIFIERS & SLUDGE PS - EXIST. PLANS & SECTIONS.DWG (BETA STD BW CTB)

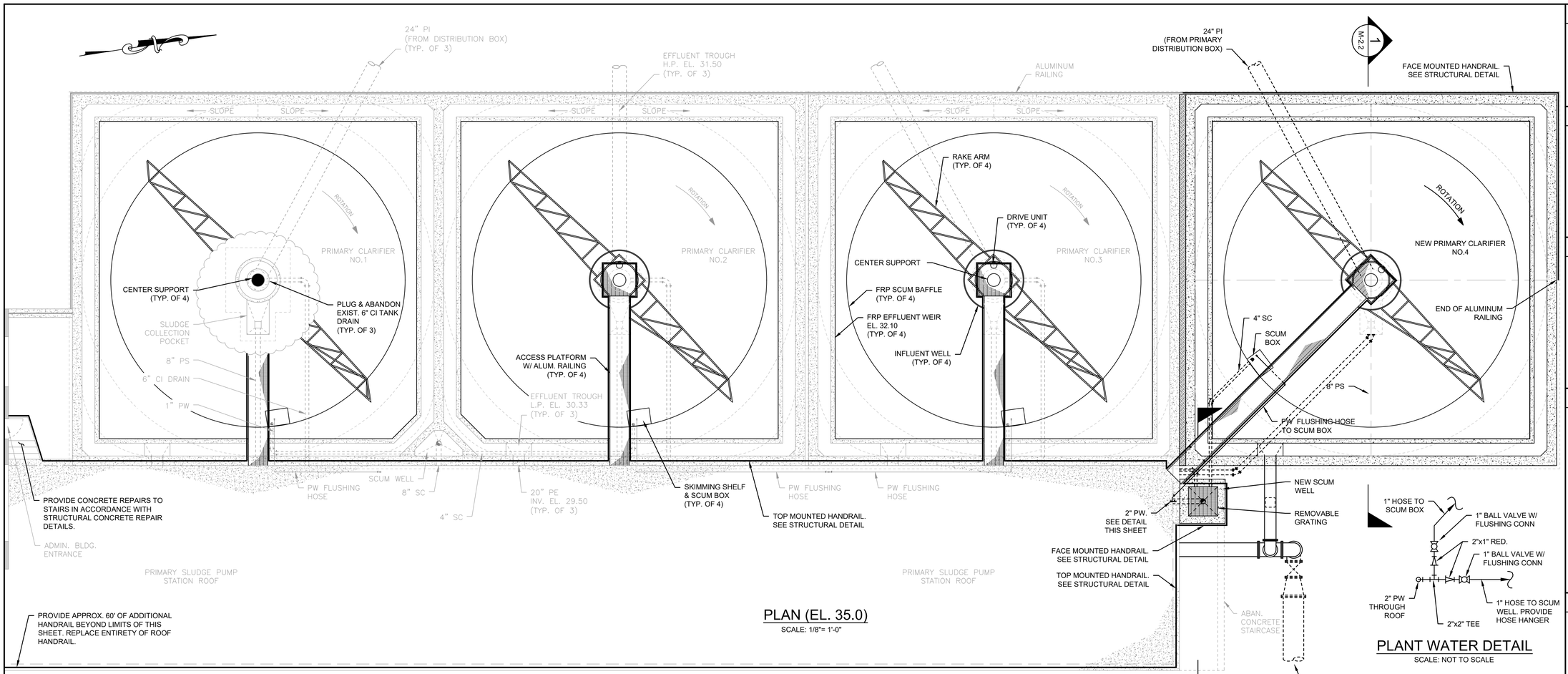

PLAN (EL. 35.0)

SCALE: 1/8"= 1'-0"

PLANT WATER DETAIL

SCALE: NOT TO SCALE

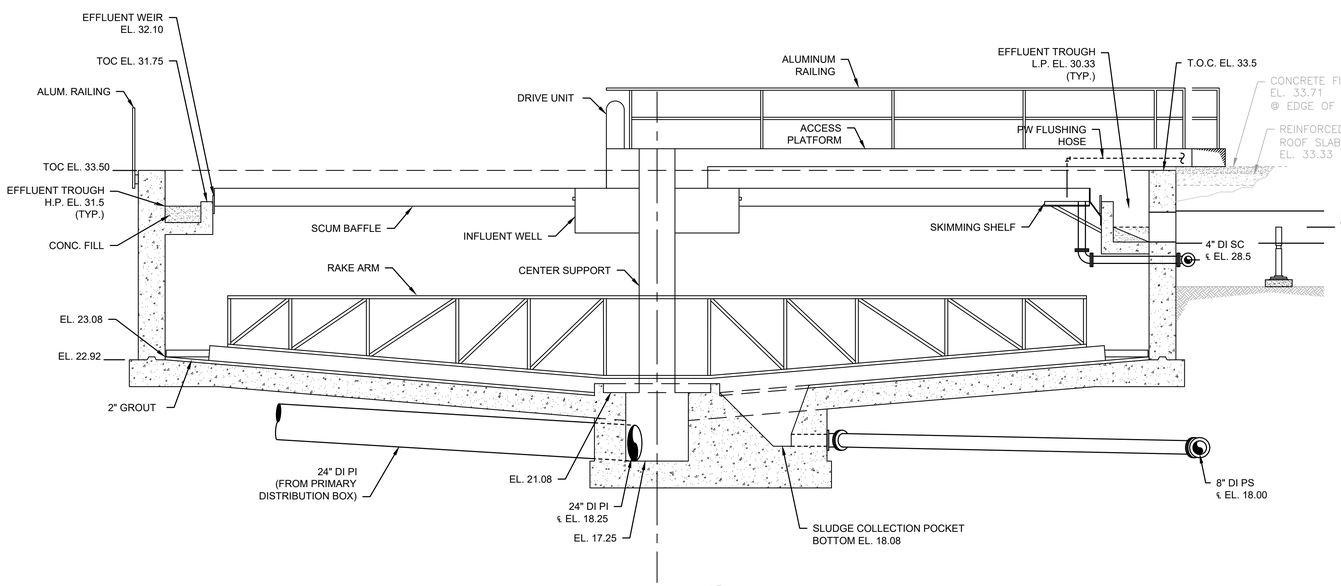

SECTION 1

SCALE: 1/4"= 1'-0"

M-2.2

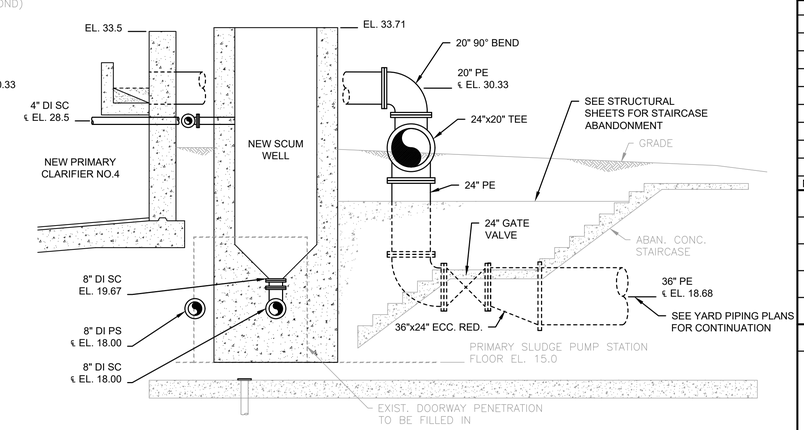

SECTION 2

SCALE: 1/4"= 1'-0"

M-2.2

PREPARED BY

BETA
www.BETA-Inc.com

REGISTERED PROFESSIONAL

COMMONWEALTH OF MASSACHUSETTS
JOSEPH FEDERICO, JR.
No. 30663
REGISTERED PROFESSIONAL ENGINEER

SUBCONSULTANT

PROJECT

Taunton Wastewater Treatment Facility Improvements Phase 1

Taunton, MA

TITLE

Primary Clarifiers Plan & Section

NO.	REVISIONS	DATE

DRAWN BY:	BM
DESIGNED BY:	JD
CHECKED BY:	SR
ISSUE DATE:	7/2/2021
BETA JOB NO.:	6050

SCALE

AS SHOWN

UNLESS OTHERWISE NOTED OR CHANGED BY REPRODUCTION

SHEET NO.

M-2.2

7/2/2021 10:34 AM J:\TAUNTON\WWTF DESIGN\AUTOCAD\PLAN SET\PHASE 1\PRIMARY CLARIFIERS & SLUDGE PS - PROP. PLANS & SECTIONS.DWG (BETA STD BW.CTB)

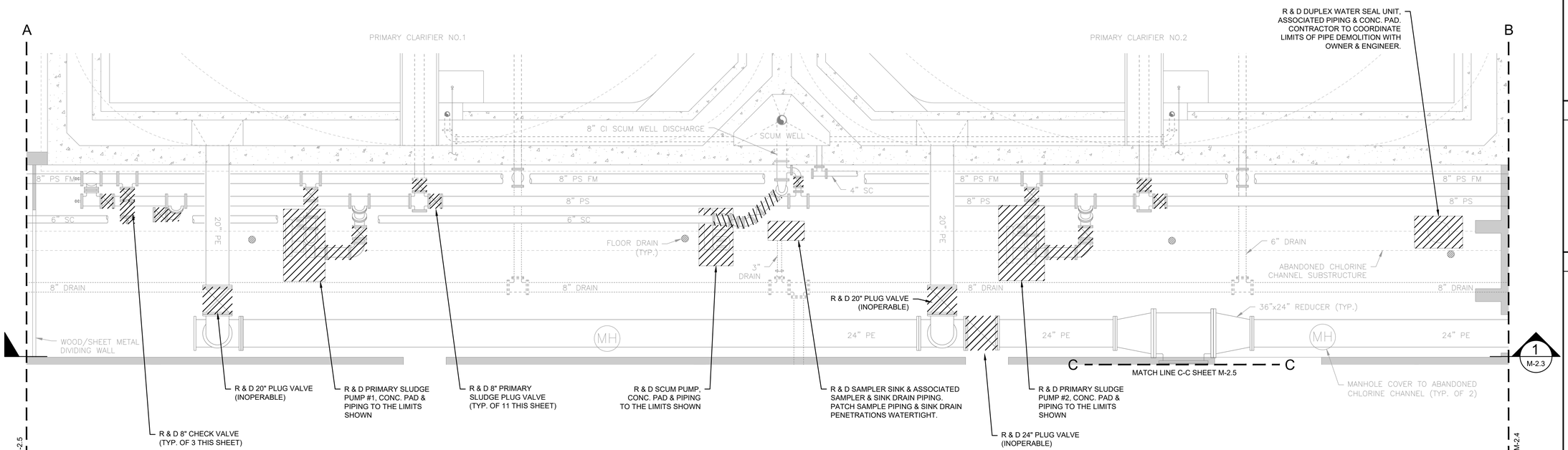

PLAN (EL. 32.0)

SCALE: 1/4"= 1'-0"

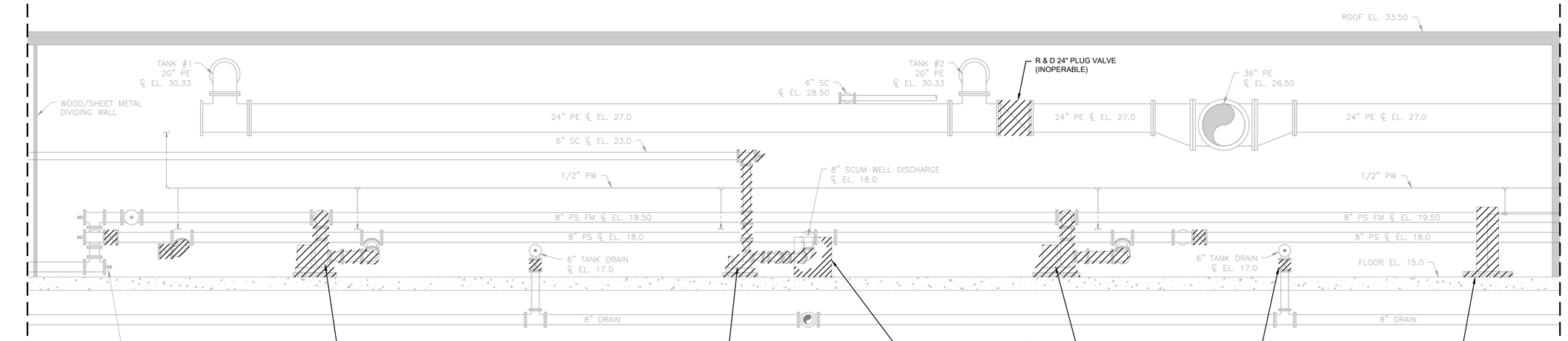

SECTION 1 / M-2.3

SCALE: 1/4"= 1'-0"

PREPARED BY

BETA
www.BETA-Inc.com

REGISTERED PROFESSIONAL

COMMONWEALTH OF MASSACHUSETTS
JOSEPH FEDERICO, JR.
No. 30663
REGISTERED PROFESSIONAL ENGINEER

SUBCONSULTANT

PROJECT

Taunton Wastewater Treatment Facility Improvements Phase 1

Taunton, MA

TITLE

Primary Sludge Pump Station Demolition Plans & Sections I

NO.	REVISIONS	DATE

DRAWN BY:	BM
DESIGNED BY:	JD
CHECKED BY:	SR
ISSUE DATE:	7/2/2021
BETA JOB NO.:	6050

SCALE

AS SHOWN

UNLESS OTHERWISE NOTED OR CHANGED BY REPRODUCTION

SHEET NO.

M-2.3

7/2/2021 10:34 AM J:\TAUNTON\WWTF DESIGN\AUTOCAD\PLAN SET\PHASE 1\PRIMARY CLARIFIERS & SLUDGE PS - EXIST. PLANS & SECTIONS.DWG (BETA STD BW.CTB)

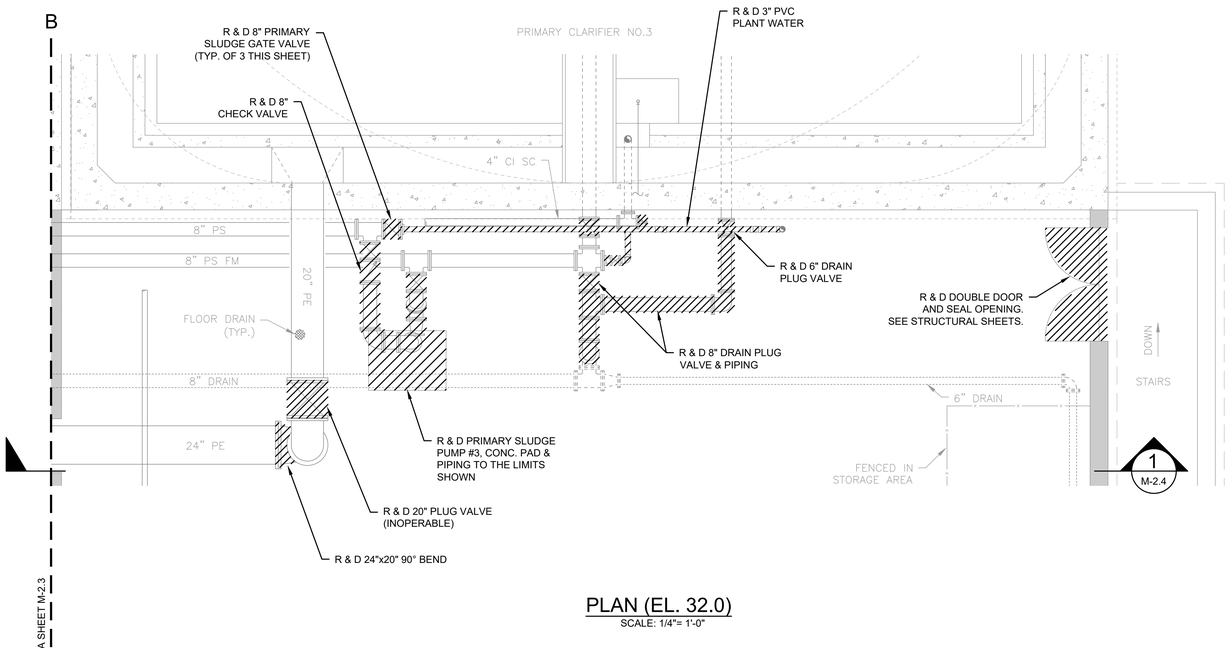

PLAN (EL. 32.0)
SCALE: 1/4"= 1'-0"

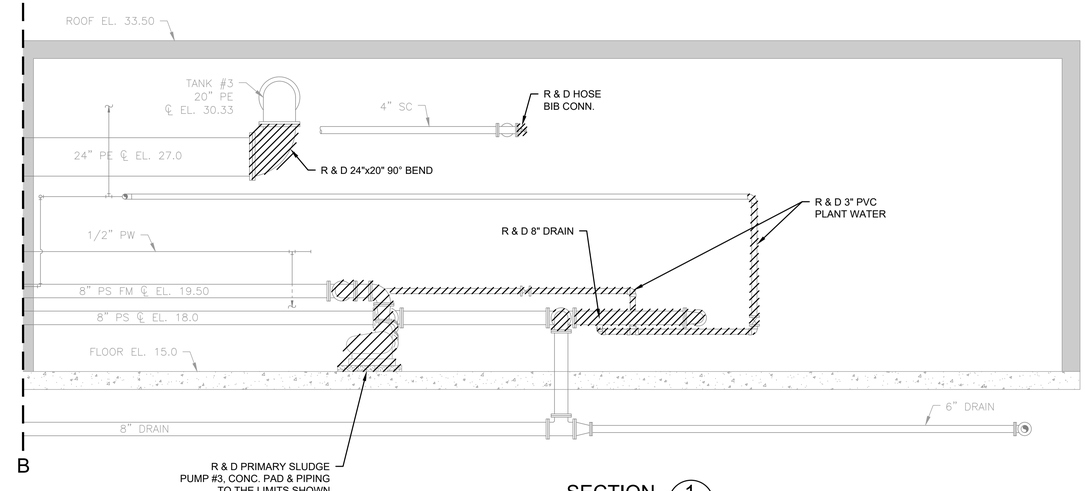

SECTION 1 / M-2.4
SCALE: 1/4"= 1'-0"

PREPARED BY

BETA
www.BETA-Inc.com

REGISTERED PROFESSIONAL

COMMONWEALTH OF MASSACHUSETTS
JOSEPH FEDERICO, JR.
No. 30663
REGISTERED PROFESSIONAL ENGINEER

SUBCONSULTANT

PROJECT

Taunton Wastewater Treatment Facility Improvements Phase 1

Taunton, MA

TITLE

Primary Sludge Pump Station Demolition Plans & Sections II

NO.	REVISIONS	DATE

DRAWN BY:	BM
DESIGNED BY:	JD
CHECKED BY:	SR
ISSUE DATE:	7/2/2021
BETA JOB NO.:	6050

SCALE

AS SHOWN

UNLESS OTHERWISE NOTED OR CHANGED BY REPRODUCTION

SHEET NO.

M-2.4

7/2/2021 10:34 AM J:\TAUNTON\WWTF DESIGN\AUTOCAD\PLAN SET\PHASE 1\PRIMARY CLARIFIERS & SLUDGE PS - EXIST. PLANS & SECTIONS.DWG (BETA STD BW.CTB)

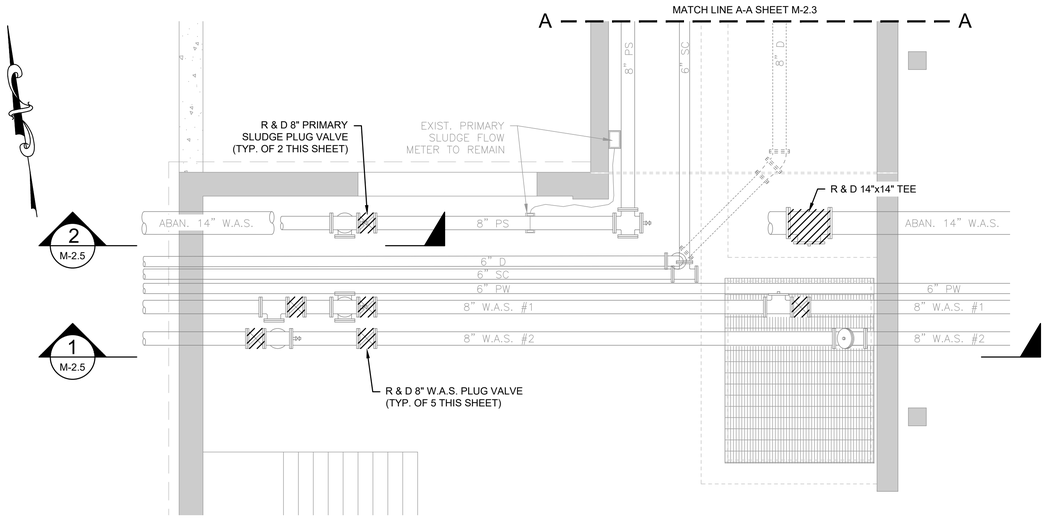

PLAN (EL. 32.0)
SCALE: 1/4"= 1'-0"

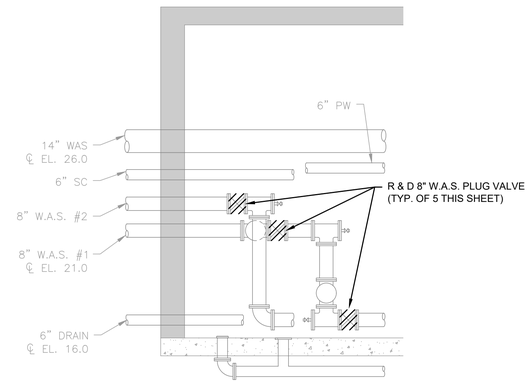

SECTION 1 M-2.5
SCALE: 1/4"= 1'-0"

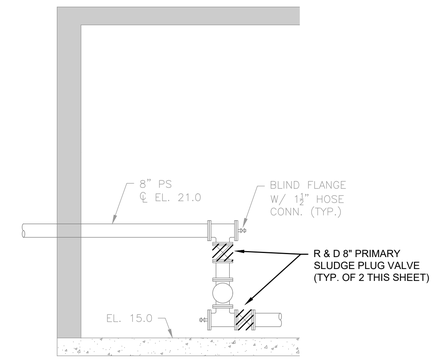

SECTION 2 M-2.5
SCALE: 1/4"= 1'-0"

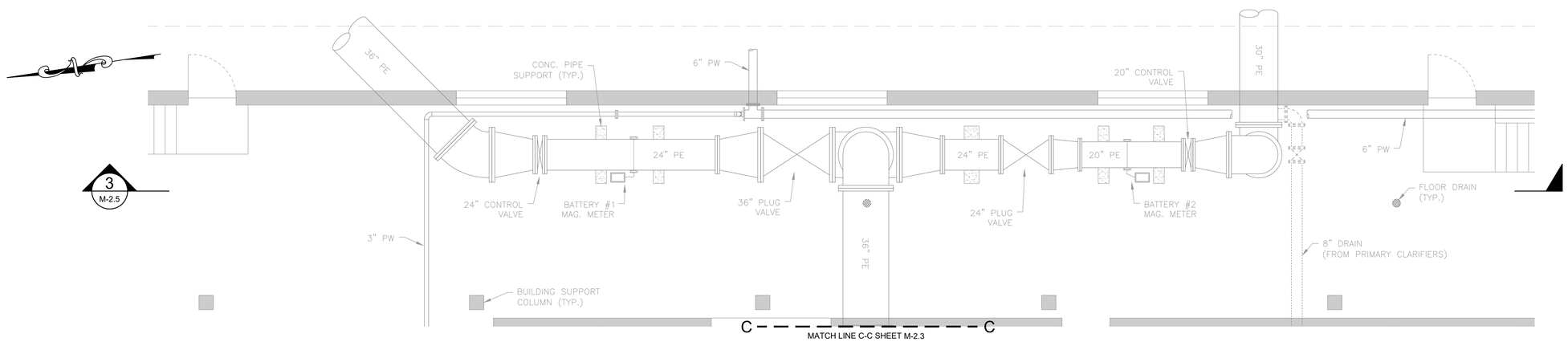

PLAN (EL. 32.0)
SCALE: 1/4"= 1'-0"

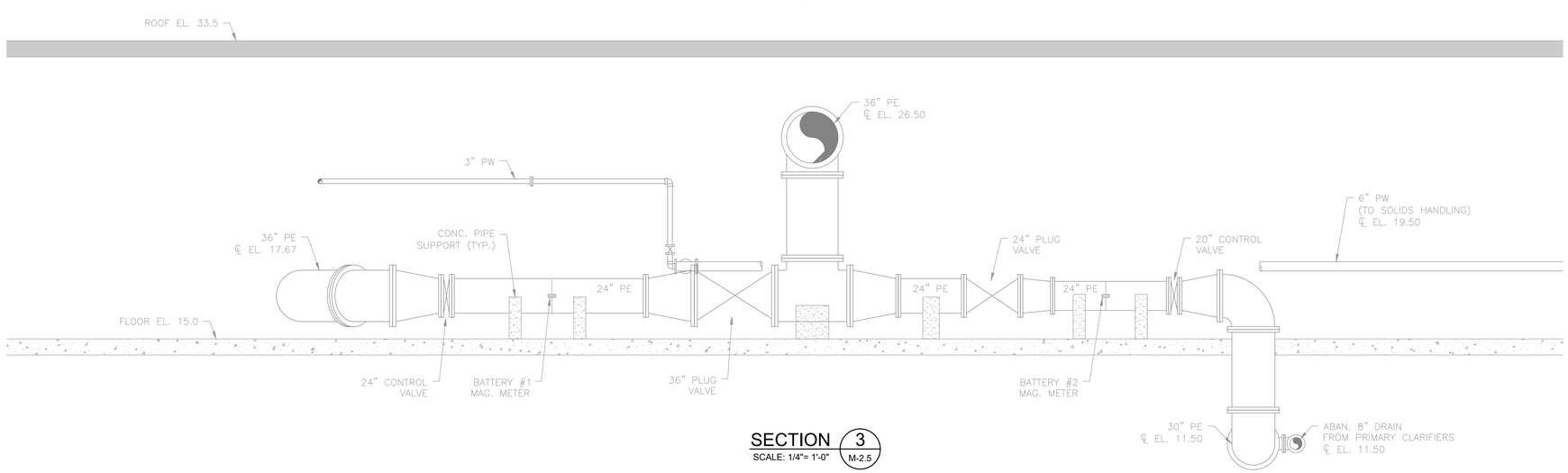

SECTION 3 M-2.5
SCALE: 1/4"= 1'-0"

PREPARED BY

BETA
www.BETA-Inc.com

REGISTERED PROFESSIONAL

COMMONWEALTH OF MASSACHUSETTS
JOSEPH FEDERICO, JR.
No. 30663
REGISTERED PROFESSIONAL ENGINEER

SUBCONSULTANT

PROJECT

Taunton Wastewater Treatment Facility Improvements Phase 1

Taunton, MA

TITLE

Primary Sludge Pump Station Demolition Plans & Sections III

NO.	REVISIONS	DATE

DRAWN BY:	BM
DESIGNED BY:	JD
CHECKED BY:	SR
ISSUE DATE:	7/2/2021
BETA JOB NO.:	6050

SCALE

AS SHOWN

UNLESS OTHERWISE NOTED OR CHANGED BY REPRODUCTION

SHEET NO.

M-2.5

7/2/2021 10:34 AM J:\TAUNTON\WWTF DESIGN\AUTOCAD\PLAN SET\PHASE 1\PRIMARY CLARIFIERS & SLUDGE PS - EXIST. PLANS & SECTIONS.DWG (BETA STD BW.CTB)

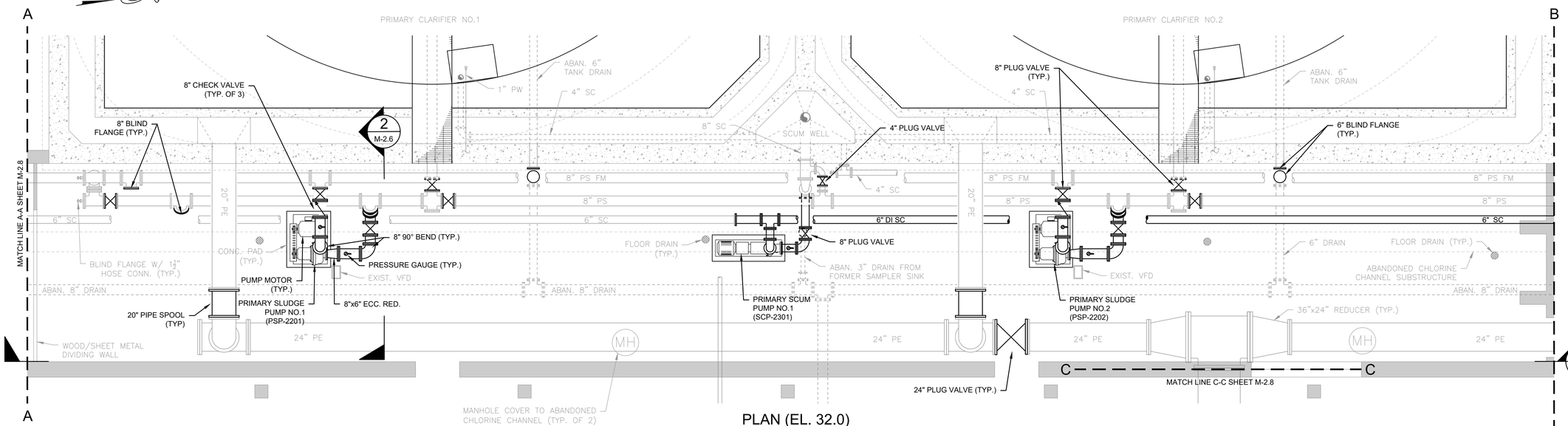

PLAN (EL. 32.0)

SCALE: 1/4"= 1'-0"

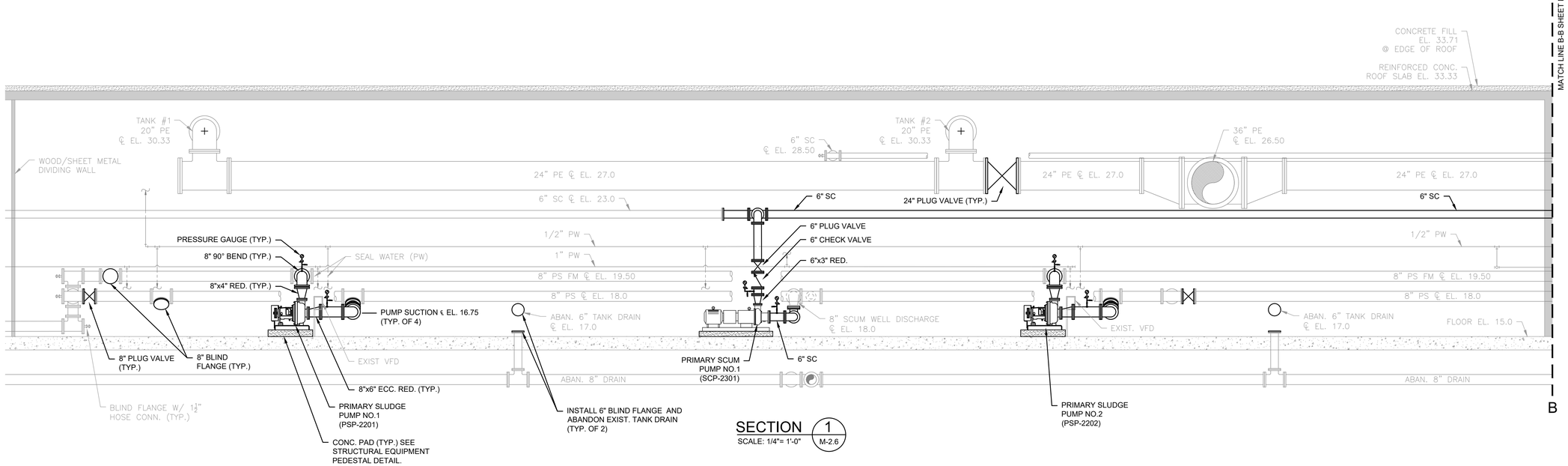

SECTION 1 (M-2.6)

SCALE: 1/4"= 1'-0"

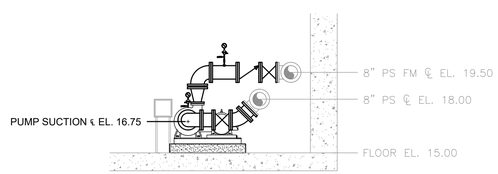

SECTION 2 (M-2.6)

SCALE: 1/4"= 1'-0"

PREPARED BY

BETA
www.BETA-Inc.com

REGISTERED PROFESSIONAL

COMMONWEALTH OF MASSACHUSETTS
JOSEPH FEDERICO, JR.
No. 30663
REGISTERED PROFESSIONAL ENGINEER

SUBCONSULTANT

PROJECT

Taunton Wastewater Treatment Facility Improvements Phase 1

Taunton, MA

TITLE

Primary Sludge Pump Station Plans & Sections I

NO.	REVISIONS	DATE

DRAWN BY:	BM
DESIGNED BY:	JD
CHECKED BY:	SR
ISSUE DATE:	7/2/2021
BETA JOB NO.:	6050

SCALE

AS SHOWN

UNLESS OTHERWISE NOTED OR CHANGED BY REPRODUCTION

SHEET NO.

M-2.6

7/2/2021 10:34 AM J:\TAUNTON\WWTF DESIGN\AUTOCAD\PLAN SET\PHASE 1\PRIMARY CLARIFIERS & SLUDGE PS - PROP. PLANS & SECTIONS.DWG (BETA STD BW.CTB)

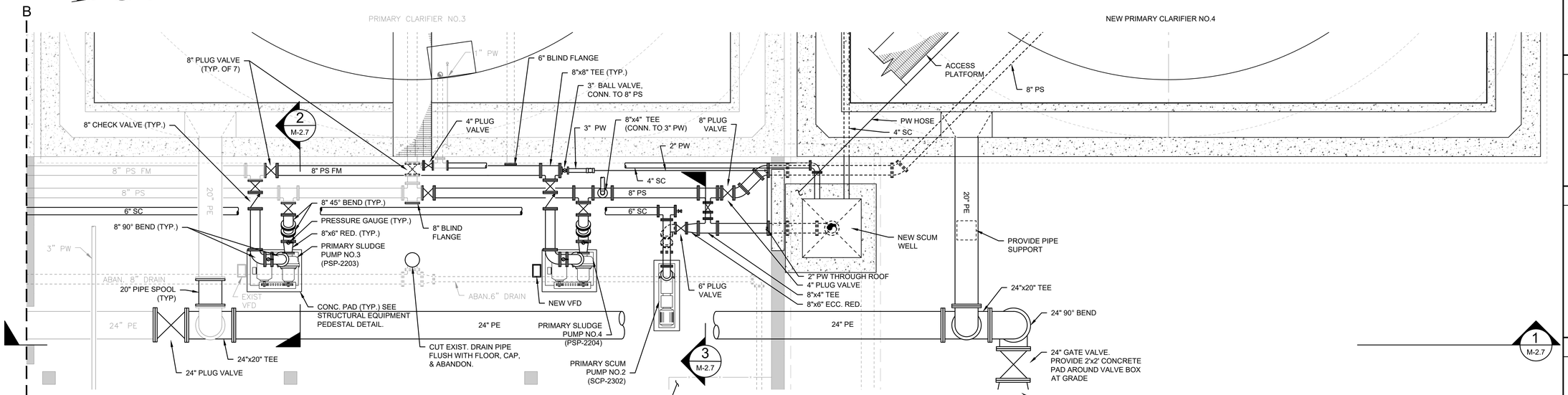

PLAN (EL. 32.0)

SCALE: 1/4"= 1'-0"

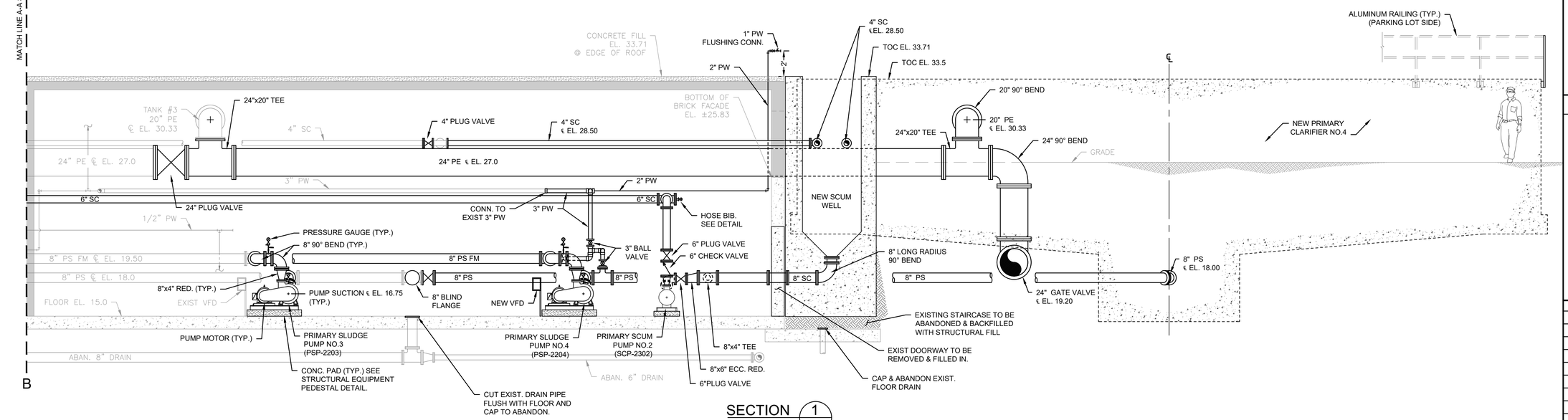

SECTION 1

SCALE: 1/4"= 1'-0"

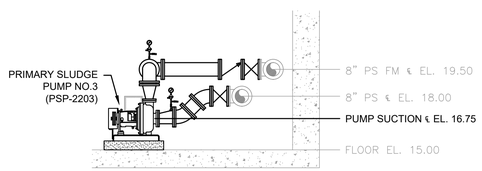

SECTION 2

SCALE: 1/4"= 1'-0"

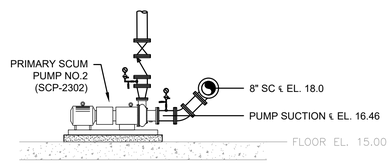

SECTION 3

SCALE: 1/4"= 1'-0"

PREPARED BY

BETA
www.BETA-Inc.com

REGISTERED PROFESSIONAL

COMMONWEALTH OF MASSACHUSETTS
JOSEPH FEDERICO, JR.
No. 30663
REGISTERED PROFESSIONAL ENGINEER

SUBCONSULTANT

PROJECT

Taunton Wastewater Treatment Facility Improvements Phase 1

Taunton, MA

TITLE

Primary Sludge Pump Station Plans & Sections II

NO.	REVISIONS	DATE

DRAWN BY:	BM
DESIGNED BY:	JD
CHECKED BY:	SR
ISSUE DATE:	7/2/2021
BETA JOB NO.:	6050

SCALE

AS SHOWN

UNLESS OTHERWISE NOTED OR CHANGED BY REPRODUCTION

SHEET NO.

M-2.7

7/2/2021 10:34 AM J:\TAUNTON\WWTF DESIGN\AUTOCAD\PLAN SET\PHASE 1\PRIMARY CLARIFIERS & SLUDGE PS - PROP. PLANS & SECTIONS.DWG (BETA STD BW.CTB)

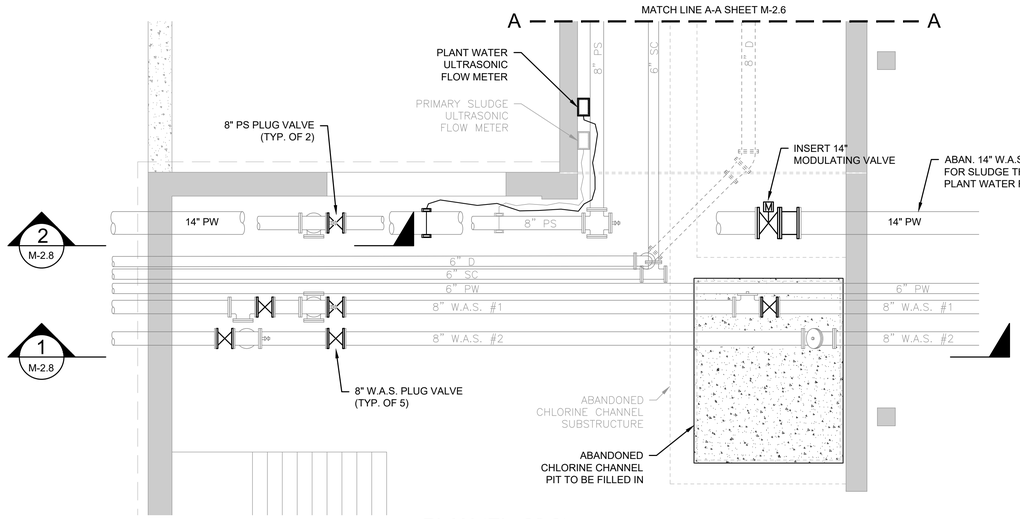

PLAN (EL. 32.0)
SCALE: 1/4"= 1'-0"

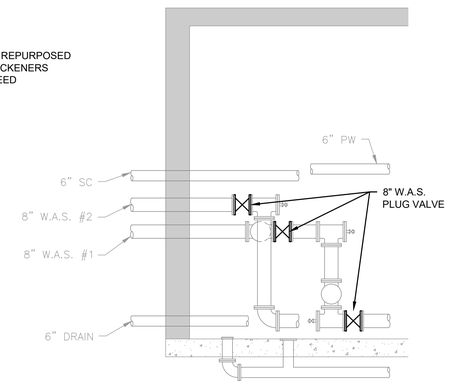

SECTION 1 (M-2.8)
SCALE: 1/4"= 1'-0"

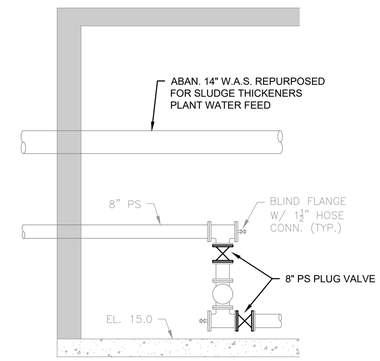

SECTION 2 (M-2.8)
SCALE: 1/4"= 1'-0"

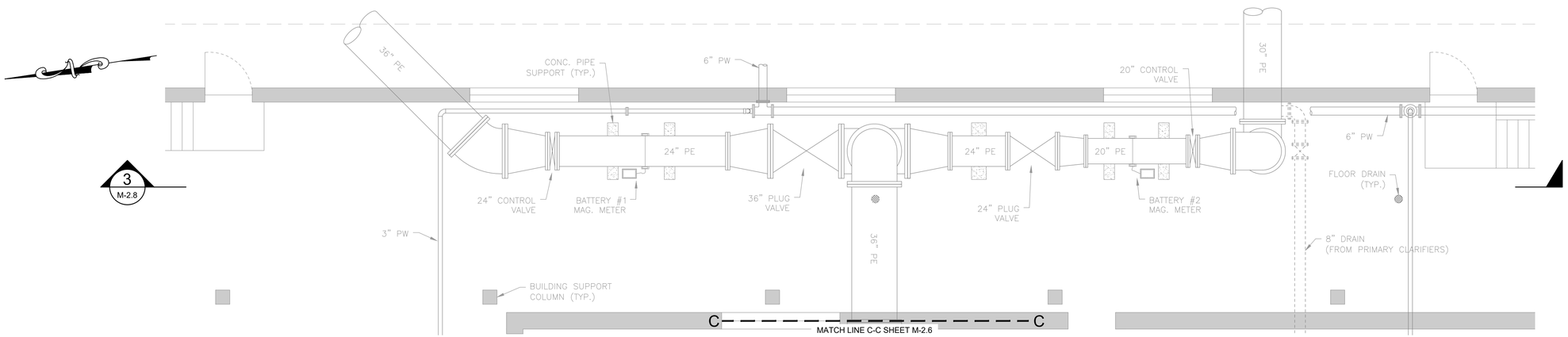

PLAN (EL. 32.0)
SCALE: 1/4"= 1'-0"

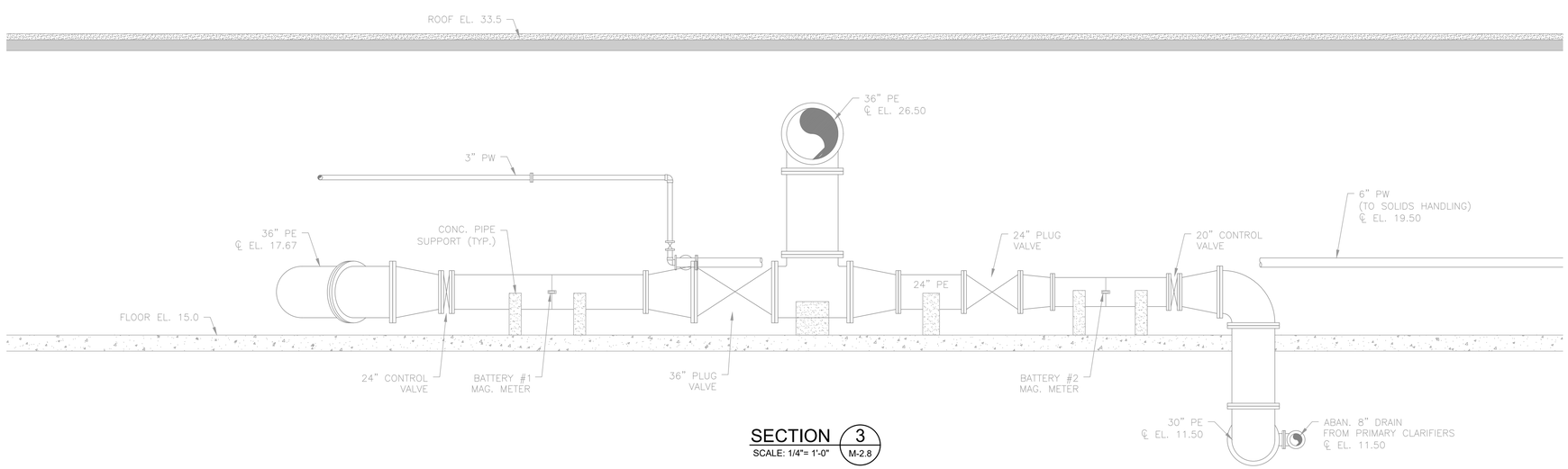

SECTION 3 (M-2.8)
SCALE: 1/4"= 1'-0"

PREPARED BY

BETA
www.BETA-Inc.com

REGISTERED PROFESSIONAL

COMMONWEALTH OF MASSACHUSETTS
JOSEPH FEDERICO, JR.
No. 30663
REGISTERED PROFESSIONAL ENGINEER

SUBCONSULTANT

PROJECT

Taunton Wastewater Treatment Facility Improvements Phase 1

Taunton, MA

TITLE

Primary Sludge Pump Station Plans & Sections III

NO.	REVISIONS	DATE

DRAWN BY:	BM
DESIGNED BY:	JD
CHECKED BY:	SR
ISSUE DATE:	7/2/2021
BETA JOB NO.:	6050

SCALE

AS SHOWN

UNLESS OTHERWISE NOTED OR CHANGED BY REPRODUCTION

SHEET NO.

M-2.8

7/2/2021 10:34 AM J:\TAUNTON\WWTF DESIGN\AUTOCAD\PLAN SET\PHASE 1\PRIMARY CLARIFIERS & SLUDGE PS - PROP. PLANS & SECTIONS.DWG (BETA STD BW CTB)

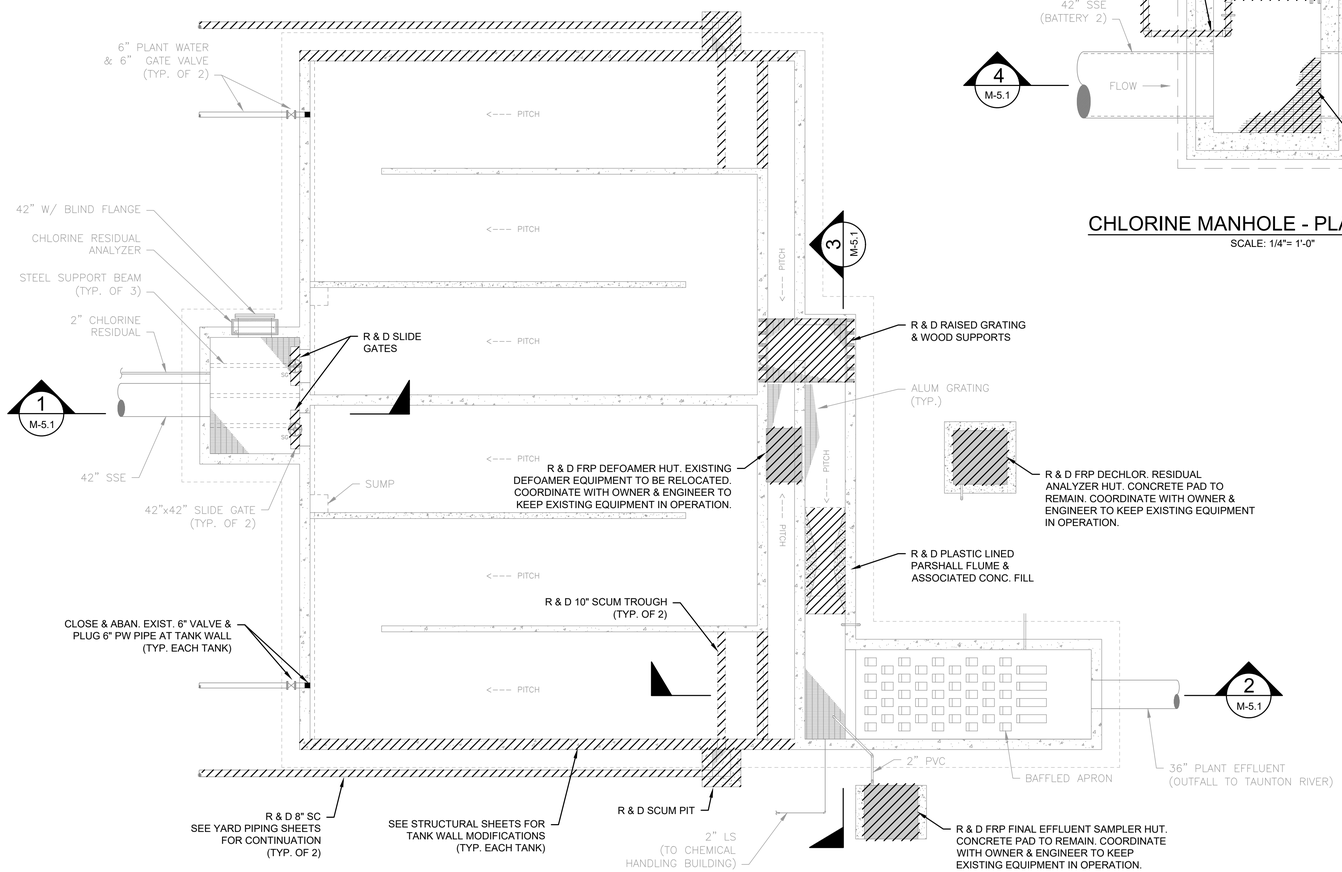

CHLORINE CONTACT TANK - PLAN (EL.15.0)

SCALE: 1/8"= 1'-0"

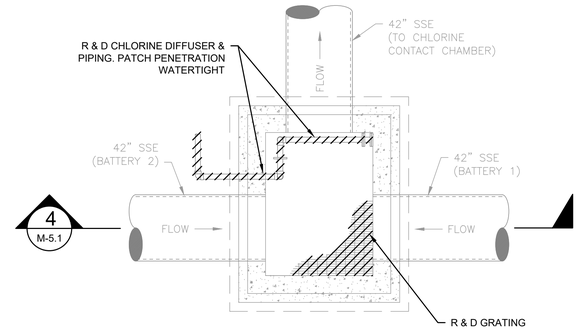

CHLORINE MANHOLE - PLAN (EL. 15.0)

SCALE: 1/4"= 1'-0"

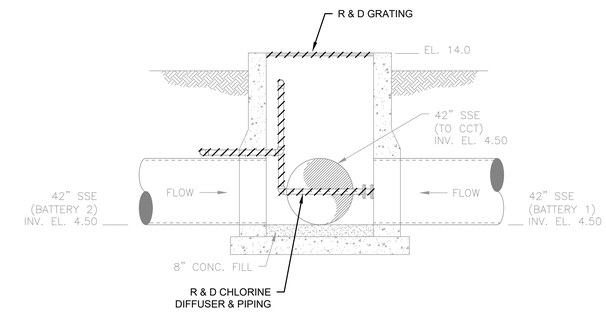

SECTION 4 M-5.1

SCALE: 1/4"= 1'-0"

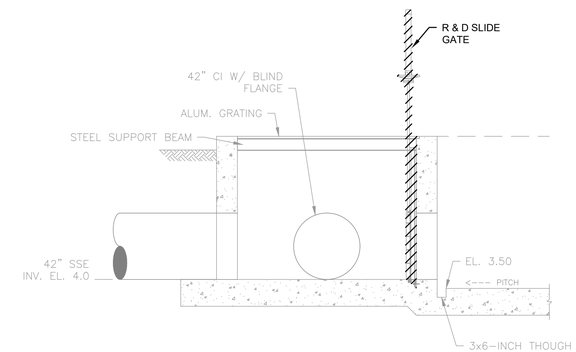

SECTION 1 M-5.1

SCALE: 1/4"= 1'-0"

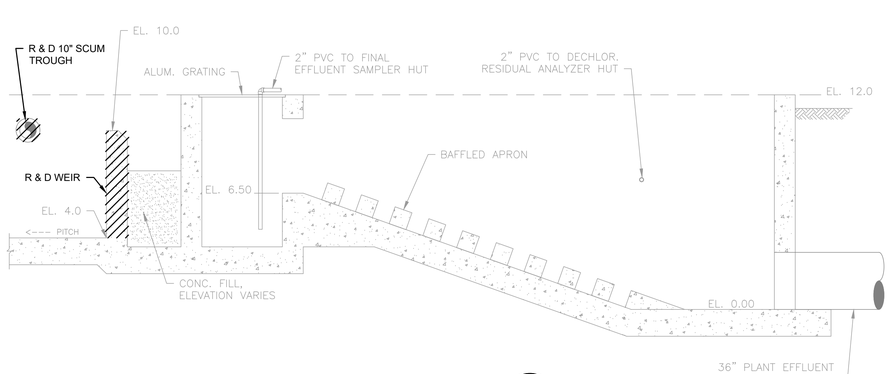

SECTION 2 M-5.1

SCALE: 1/4"= 1'-0"

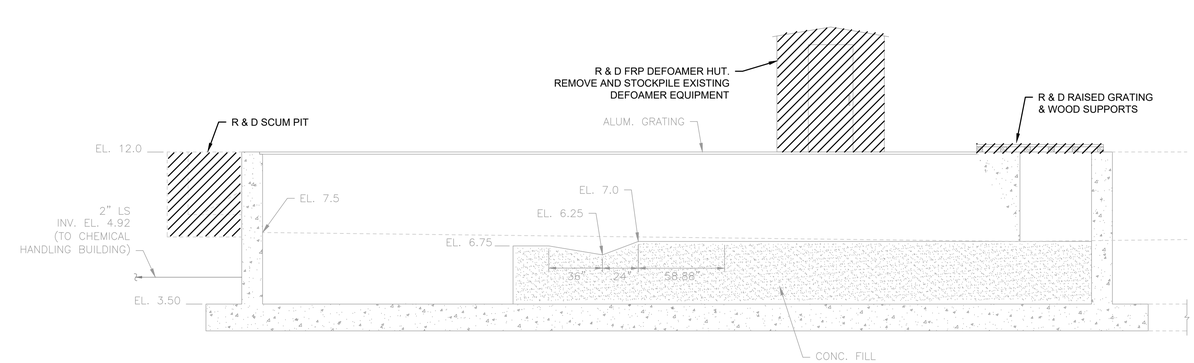

SECTION 3 M-5.1

SCALE: 1/4"= 1'-0"

PREPARED BY

BETA
www.BETA-Inc.com

REGISTERED PROFESSIONAL

COMMONWEALTH OF MASSACHUSETTS
JOSEPH FEDERICO, JR.
No. 30663
REGISTERED PROFESSIONAL ENGINEER

SUBCONSULTANT

PROJECT

Taunton Wastewater Treatment Facility Improvements Phase 1

Taunton, MA

TITLE

Chlorine Contact Tank & Manhole Demolition Plan & Sections

NO.	REVISIONS	DATE

DRAWN BY:	BM
DESIGNED BY:	BM
CHECKED BY:	SR
ISSUE DATE:	7/2/2021
BETA JOB NO.:	6050

SCALE

AS SHOWN

UNLESS OTHERWISE NOTED OR CHANGED BY REPRODUCTION

SHEET NO.

M-5.1

7/2/2021 10:35 AM J:\TAUNTON\WWTF DESIGN\AUTOCAD\PLAN SET\PHASE 1\CHLORINE CONTACT CHAMBER - EXIST. PLANS & SECTIONS.DWG (BETA STD BW.CTB)

SLIDE GATE SCHEDULE - CHLORINE CONTACT TANK										
GATE TAG	LOCATION	MOUNTING TYPE	TYPE	OPENING WIDTH (IN)	OPENING HEIGHT (IN)	OPENING DIAMETER (IN)	GATE MATERIAL [A]	OPERATOR	OPENING INVERT EL. (FT)	OPERATING FLOOR EL. (FT)
SG-13	CHLORINE CONTACT TANK INFLUENT	WALL	SELF CONTAINED RISING STEM	42	42	–	6061-T6 ALUMINUM	MANUAL	4.00	12.00
SG-14	CHLORINE CONTACT TANK INFLUENT	WALL	SELF CONTAINED RISING STEM	42	42	–	6061-T6 ALUMINUM	MANUAL	4.00	12.00

[A] FRP SLIDE GATES WILL BE CONSIDERED PROVIDED THEY MEET PERFORMANCE SPECIFICATIONS

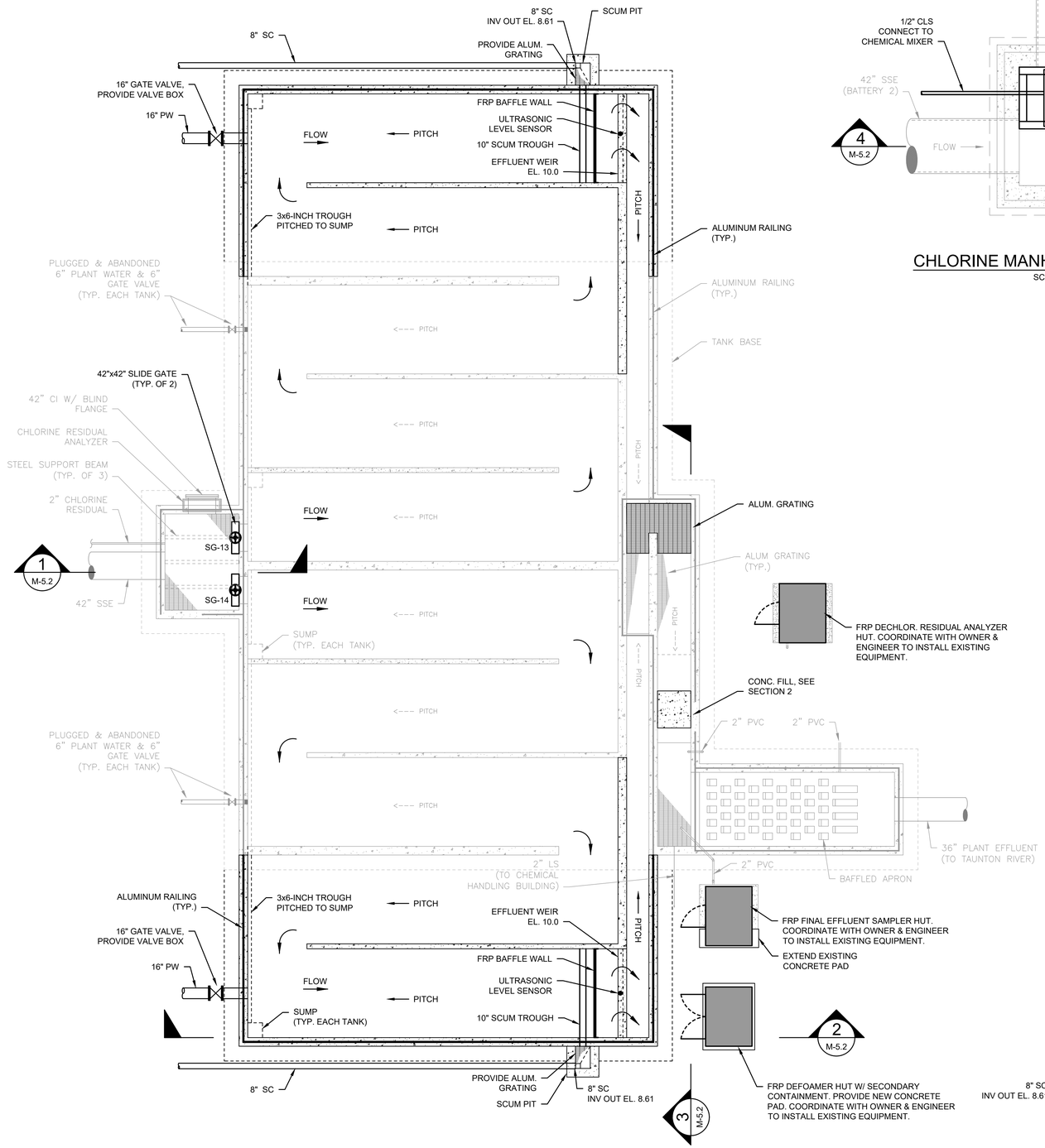

CHLORINE CONTACT TANK - PLAN (EL. 15.0)

SCALE: 1/8"= 1'-0"

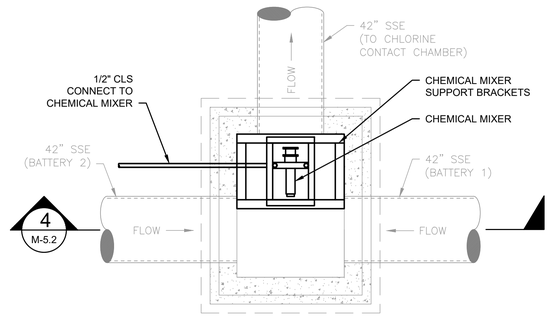

CHLORINE MANHOLE - PLAN (EL. 15.0)

SCALE: 1/4"= 1'-0"

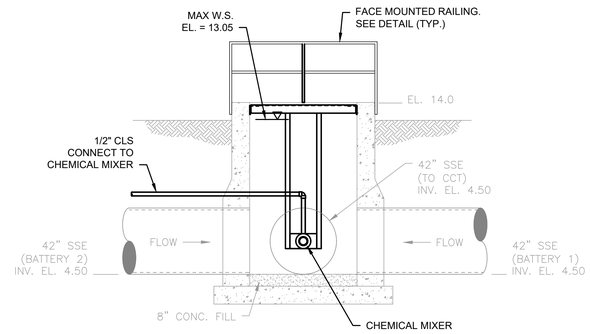

SECTION 4 M-5.2

SCALE: 1/4"= 1'-0"

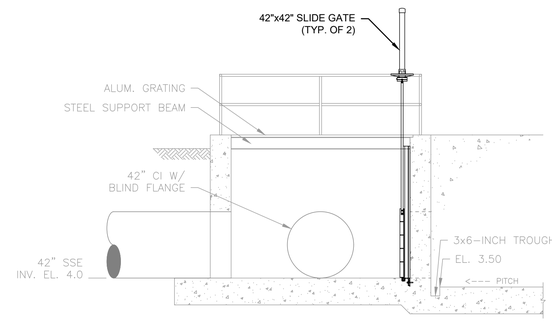

SECTION 1 M-5.2

SCALE: 1/4"= 1'-0"

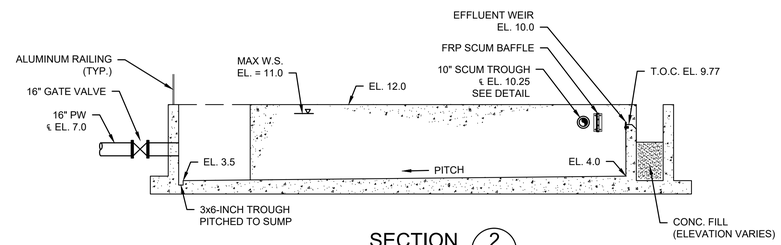

SECTION 2 M-5.2

SCALE: 1/8"= 1'-0"

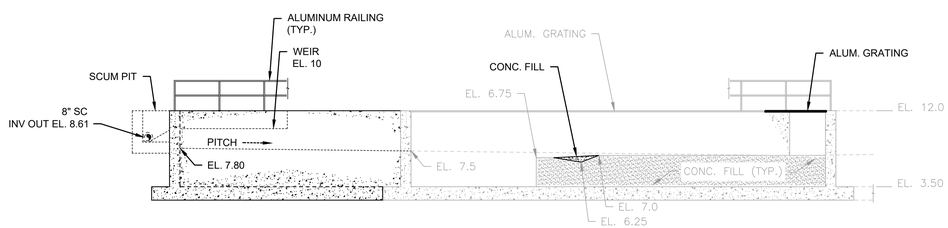

SECTION 3 M-5.2

SCALE: 1/8"= 1'-0"

PREPARED BY

BETA
www.BETA-Inc.com

REGISTERED PROFESSIONAL

COMMONWEALTH OF MASSACHUSETTS
JOSEPH FEDERICO, JR.
No. 30663
REGISTERED PROFESSIONAL ENGINEER

SUBCONSULTANT

PROJECT

Taunton Wastewater Treatment Facility Improvements Phase 1

Taunton, MA

TITLE

Chlorine Contact Tank & Manhole Plan & Sections

NO.	REVISIONS	DATE

DRAWN BY:	BM
DESIGNED BY:	BM
CHECKED BY:	SR
ISSUE DATE:	7/2/2021
BETA JOB NO.:	6050

SCALE

AS SHOWN

UNLESS OTHERWISE NOTED OR CHANGED BY REPRODUCTION

SHEET NO.

M-5.2

7/2/2021 10:35 AM J:\TAUNTON\WWTF DESIGN\AUTOCAD\PLAN SET\PHASE 1\CHLORINE CONTACT CHAMBER - PROP. PLANS & SECTIONS.DWG (BETA STD BW.CTB)

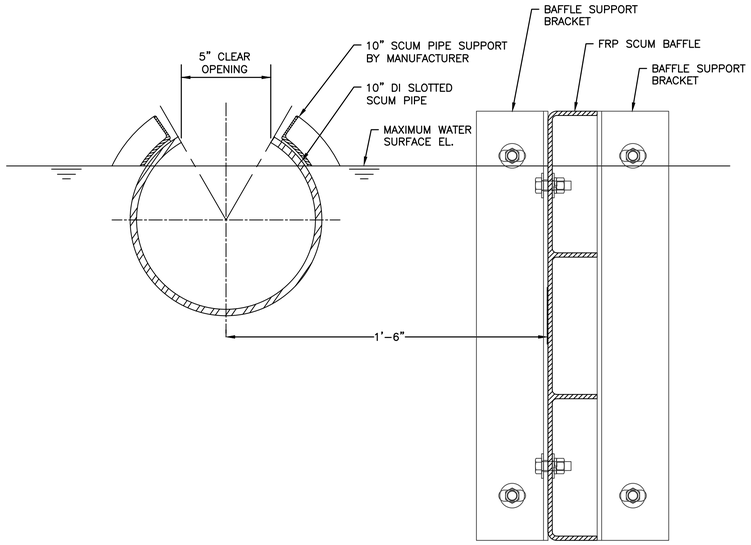

SCUM PIPE DETAIL

SCALE: 3"= 1'-0"

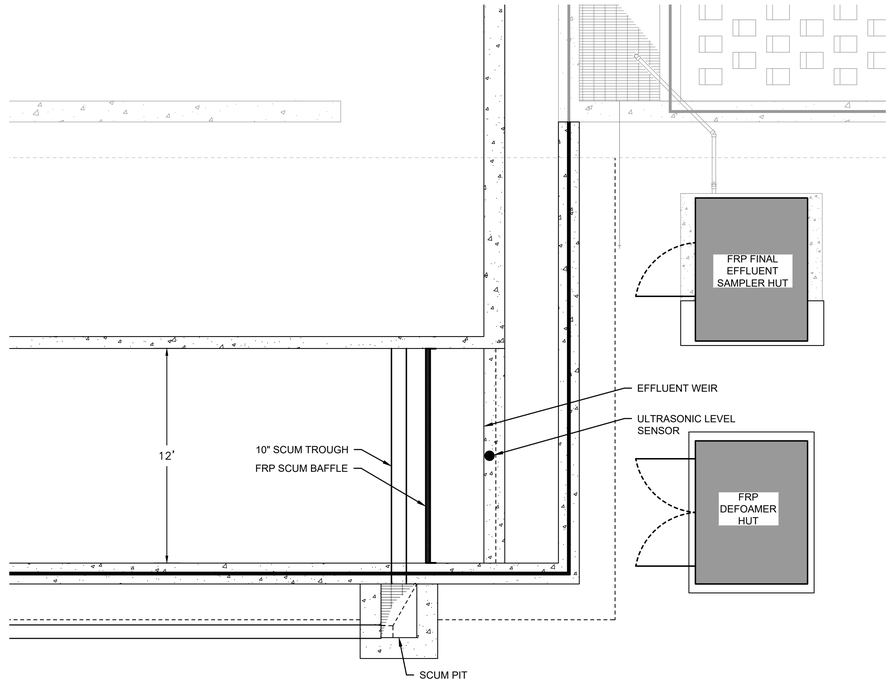

PLAN

SCALE: 1/4"= 1'-0"

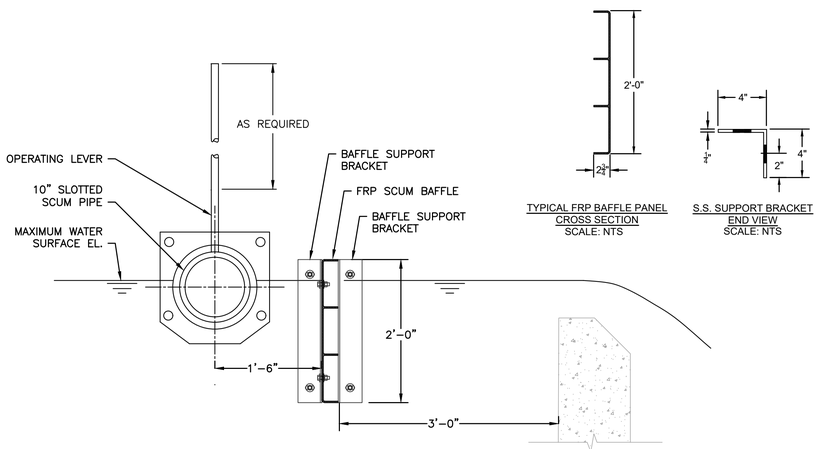

TYPICAL FRP BAFFLE PANEL CROSS SECTION
SCALE: NTS

S.S. SUPPORT BRACKET END VIEW
SCALE: NTS

SCUM BAFFLE DETAIL

SCALE: NTS

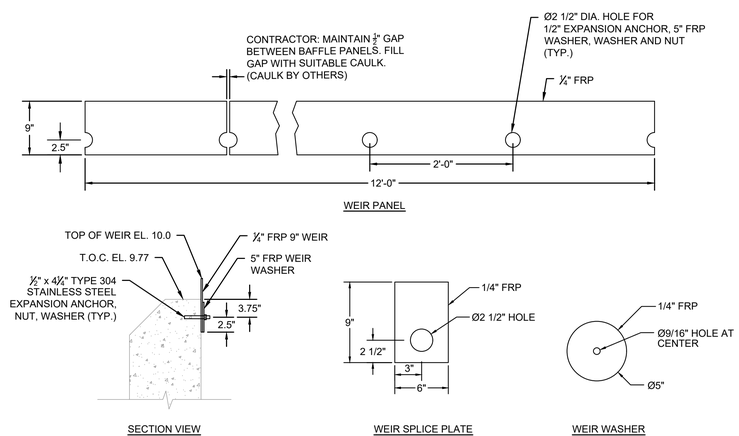

CHLORINE CONTACT CHAMBER EFFLUENT WEIR

SCALE: NOT TO SCALE

PREPARED BY

BETA
www.BETA-Inc.com

REGISTERED PROFESSIONAL

COMMONWEALTH OF MASSACHUSETTS
JOSEPH FEDERICO, JR.
No. 30663
REGISTERED PROFESSIONAL ENGINEER

SUBCONSULTANT

PROJECT

Taunton Wastewater Treatment Facility Improvements Phase 1

Taunton, MA

TITLE

Chlorine Contact Tank Details

NO.	REVISIONS	DATE

DRAWN BY:	BM
DESIGNED BY:	BM
CHECKED BY:	SR
ISSUE DATE:	7/2/2021
BETA JOB NO.:	6050

SCALE

AS SHOWN

UNLESS OTHERWISE NOTED OR CHANGED BY REPRODUCTION

SHEET NO.

M-5.3

7/2/2021 10:35 AM J:\TAUNTON\WWTF DESIGN\AUTOCAD\PLAN SET\PHASE 1\CHLORINE CONTACT CHAMBER - PROP. PLANS & SECTIONS.DWG (BETA STD BW.CTB)

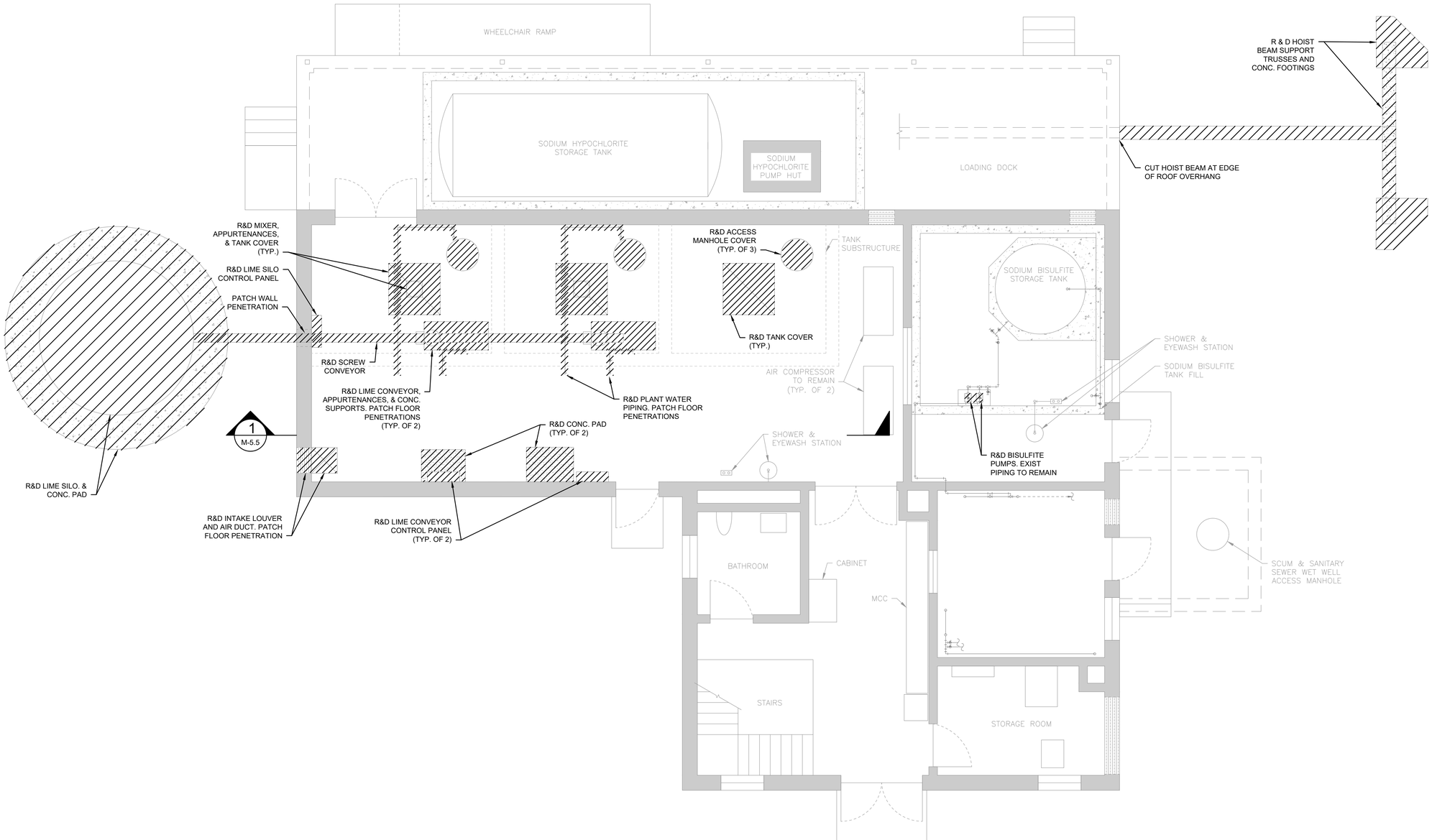

FIRST FLOOR - PLAN (EL. 24.0)

SCALE: 1/4"= 1'-0"

PREPARED BY

BETA
www.BETA-Inc.com

REGISTERED PROFESSIONAL

COMMONWEALTH OF MASSACHUSETTS
JOSEPH FEDERICO, JR.
No. 30663
REGISTERED PROFESSIONAL ENGINEER

SUBCONSULTANT

PROJECT

Taunton Wastewater Treatment Facility Improvements Phase 1

Taunton, MA

TITLE

Chemical Handling Building Demolition Plan

NO.	REVISIONS	DATE

DRAWN BY:	BM
DESIGNED BY:	MA
CHECKED BY:	SR
ISSUE DATE:	7/2/2021
BETA JOB NO.:	6050

SCALE

AS SHOWN

UNLESS OTHERWISE NOTED OR CHANGED BY REPRODUCTION

SHEET NO.

M-5.4

7/2/2021 10:35 AM J:\TAUNTON\WWTF DESIGN\AUTOCAD\PLAN SET\PHASE 1\CHEMICAL HANDLING BUILDING - EXIST. PLANS & SECTIONS.DWG (BETA STD BW.CTB)

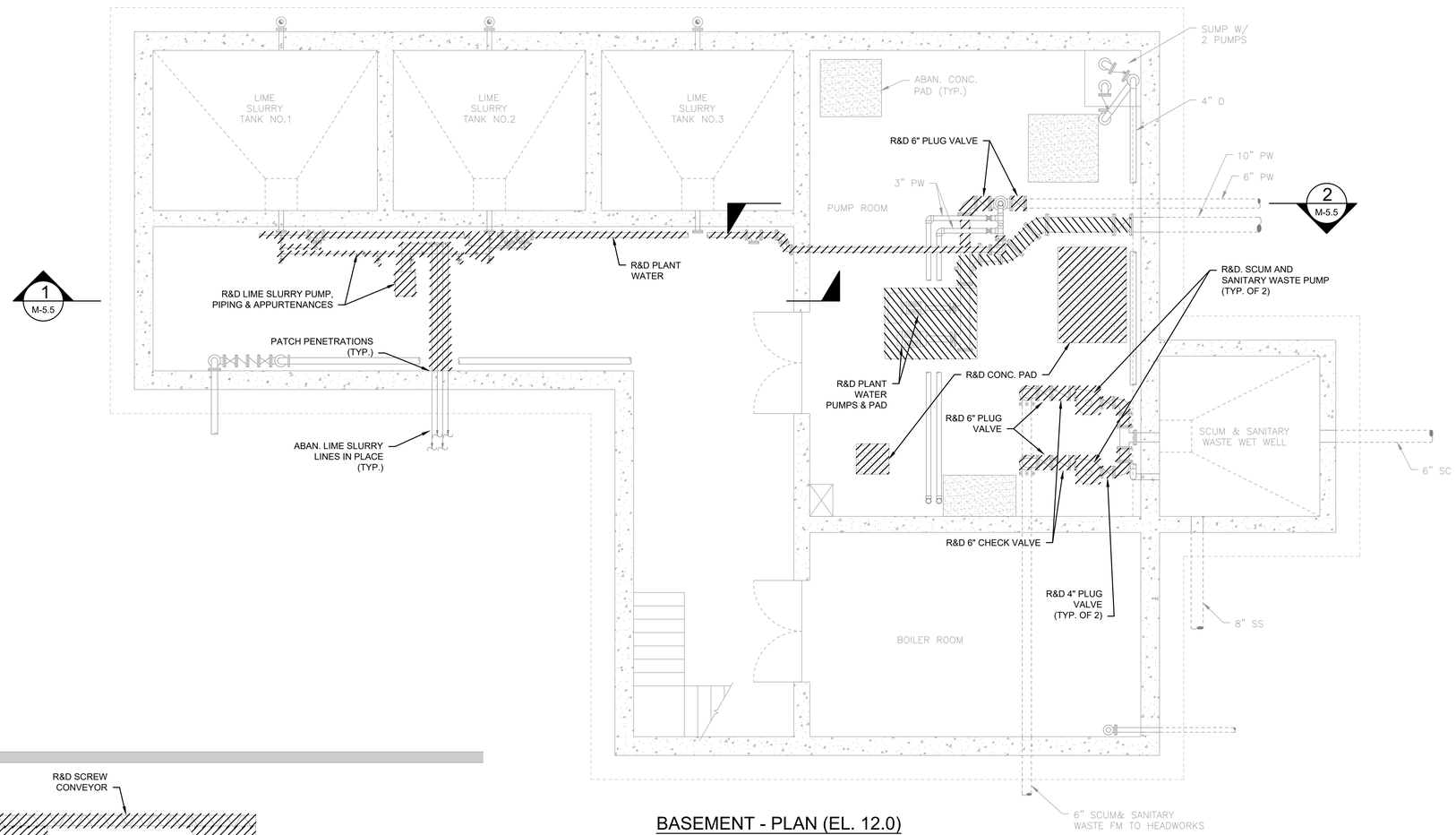

BASEMENT - PLAN (EL. 12.0)

SCALE: 1/4"= 1'-0"

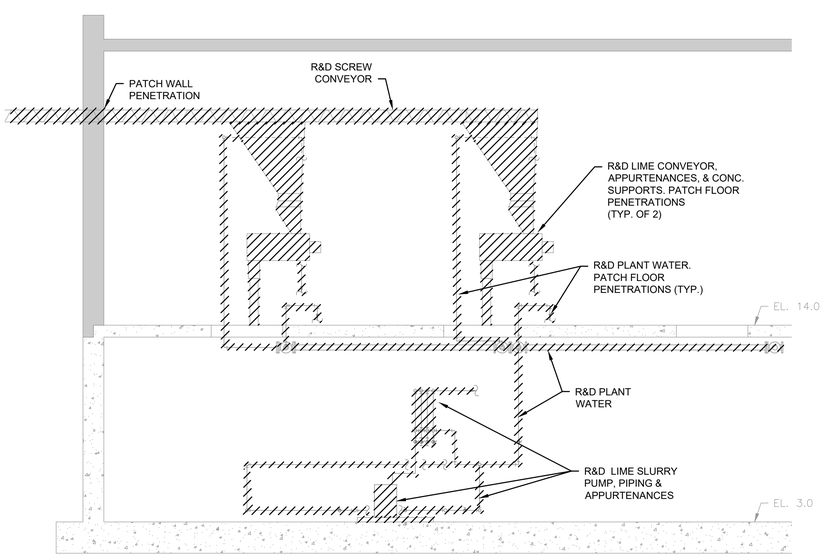

SECTION 1 (M-5.4)

SCALE: 1/4"= 1'-0"

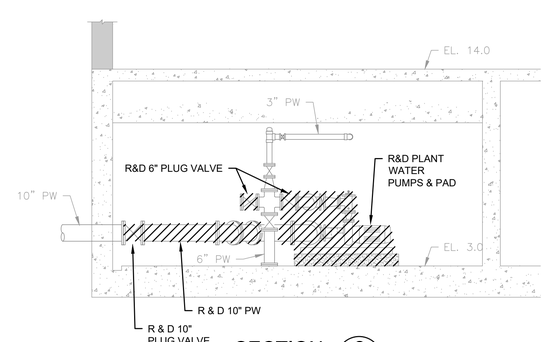

SECTION 2 (M-5.5)

SCALE: 1/4"= 1'-0"

PREPARED BY

BETA

www.BETA-Inc.com

REGISTERED PROFESSIONAL

COMMONWEALTH OF MASSACHUSETTS
JOSEPH FEDERICO, JR.
No. 30663
REGISTERED PROFESSIONAL ENGINEER

SUBCONSULTANT

PROJECT

Taunton Wastewater Treatment Facility Improvements Phase 1

Taunton, MA

TITLE

Chemical Handling Building Demolition Plan & Sections

NO.	REVISIONS	DATE

DRAWN BY:	BM
DESIGNED BY:	MA
CHECKED BY:	SR
ISSUE DATE:	7/2/2021
BETA JOB NO.:	6050

SCALE

AS SHOWN

UNLESS OTHERWISE NOTED OR CHANGED BY REPRODUCTION

SHEET NO.

M-5.5

7/2/2021 10:35 AM J:\TAUNTON\WWTF DESIGN\AUTOCAD\PLAN SET\PHASE 1\CHEMICAL HANDLING BUILDING - EXIST PLANS & SECTIONS.DWG (BETA STD BW.CTB)

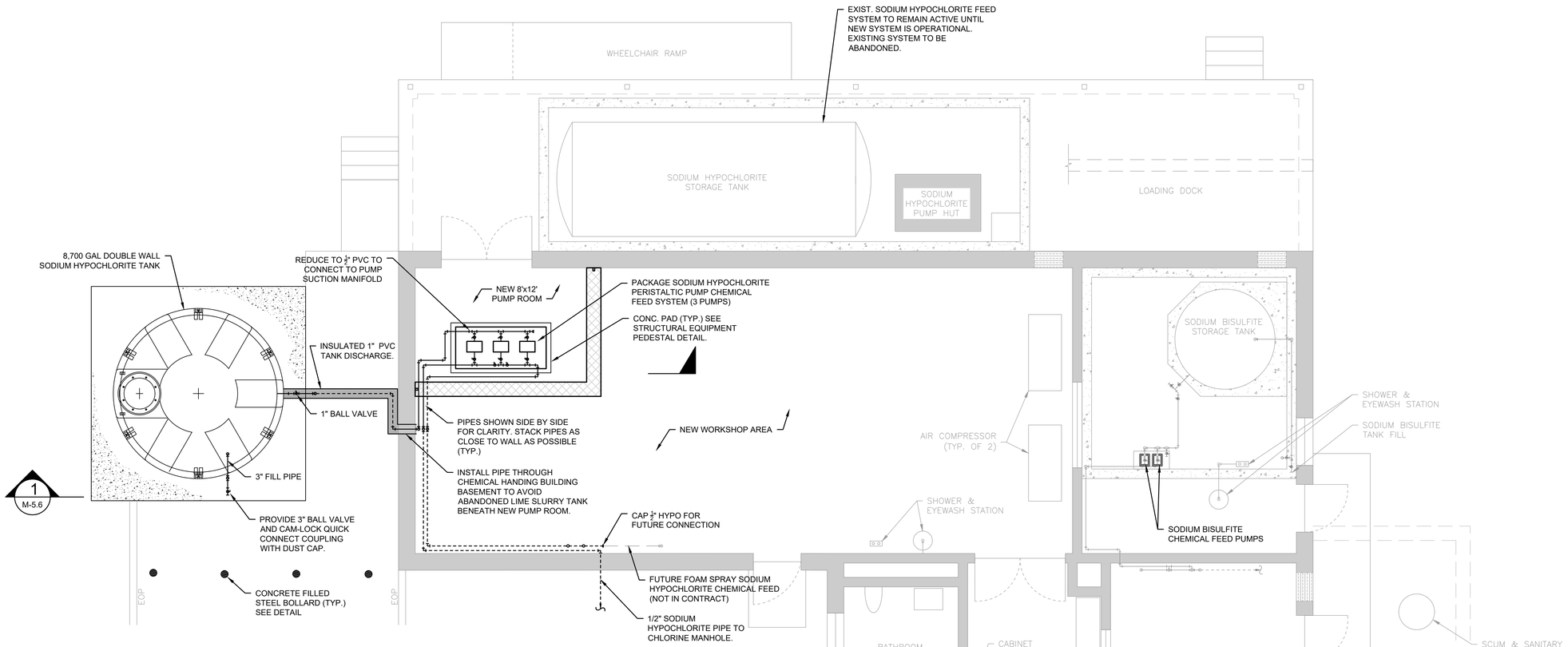

FIRST FLOOR - PLAN (EL. 24.0)

SCALE: 1/4"= 1'-0"

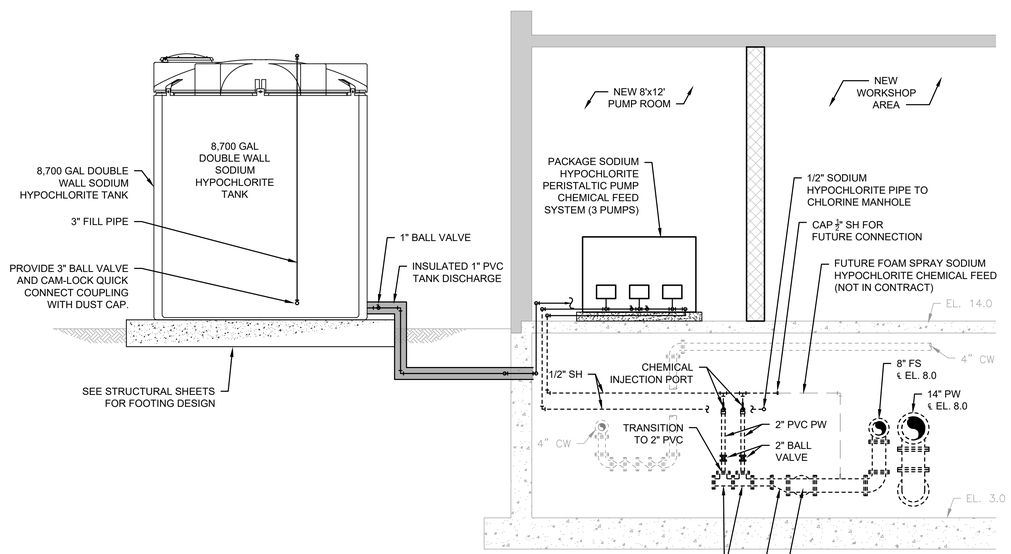

SECTION 1 M-5.6

SCALE: 1/4"= 1'-0"

PREPARED BY

BETA

www.BETA-Inc.com

REGISTERED PROFESSIONAL

COMMONWEALTH OF MASSACHUSETTS JOSEPH FEDERICO, JR. No. 30850 REGISTERED PROFESSIONAL ENGINEER

SUBCONSULTANT

PROJECT

Taunton Wastewater Treatment Facility Improvements Phase 1

Taunton, MA

TITLE

Chemical Handling Building Plan

NO.	REVISIONS	DATE

DRAWN BY:	BM
DESIGNED BY:	MA
CHECKED BY:	SR
ISSUE DATE:	7/2/2021
BETA JOB NO.:	6050

SCALE

AS SHOWN

UNLESS OTHERWISE NOTED OR CHANGED BY REPRODUCTION

SHEET NO.

M-5.6

7/2/2021 10:35 AM J:\TAUNTON\WWTF DESIGN\AUTOCAD\PLAN SET\PHASE 1\CHEMICAL HANDLING BUILDING - PROP. PLANS & SECTIONS.DWG (BETA STD BW CTB)

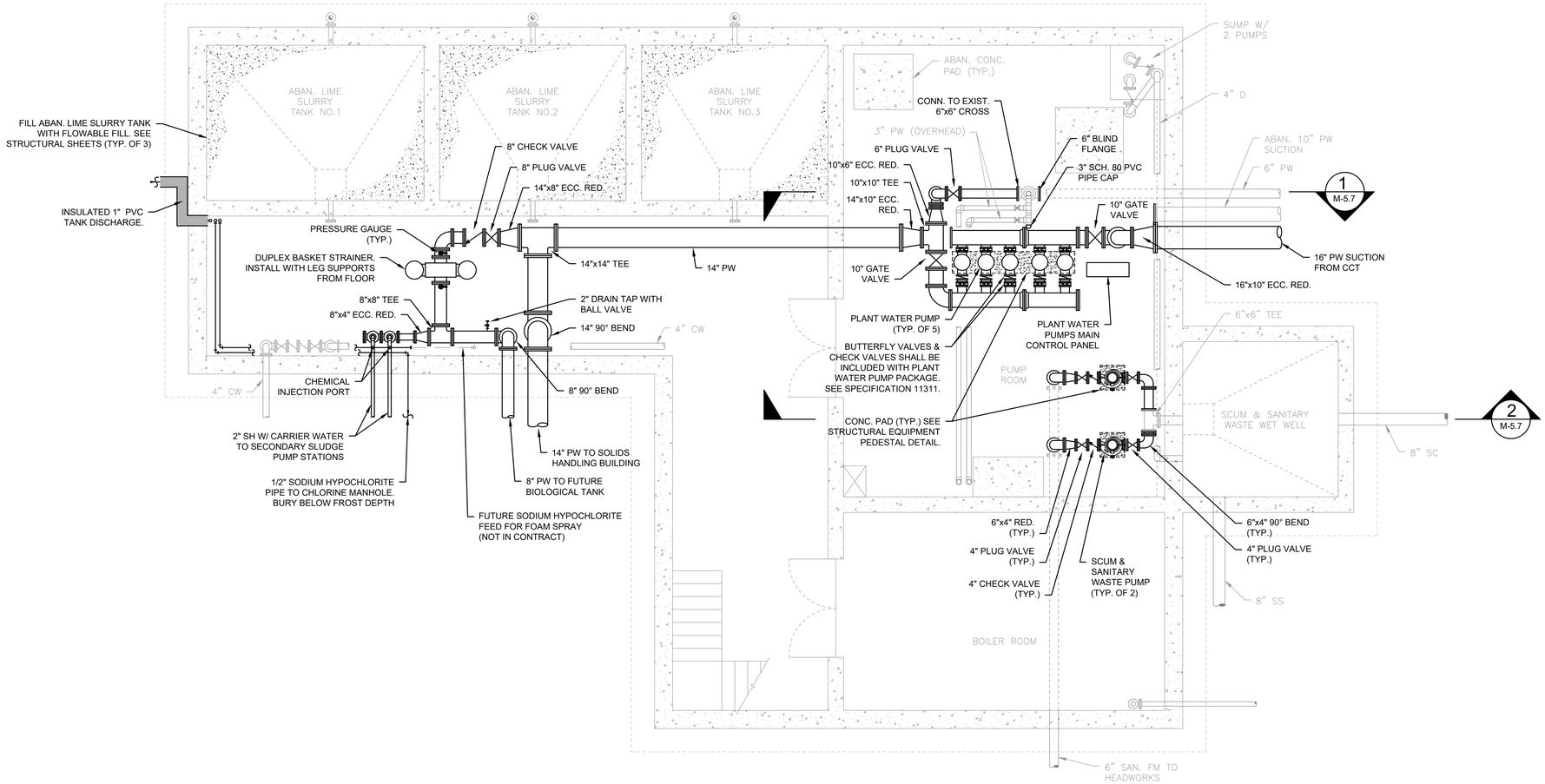

BASEMENT - PLAN (EL. 12.0)

SCALE: 1/4"= 1'-0"

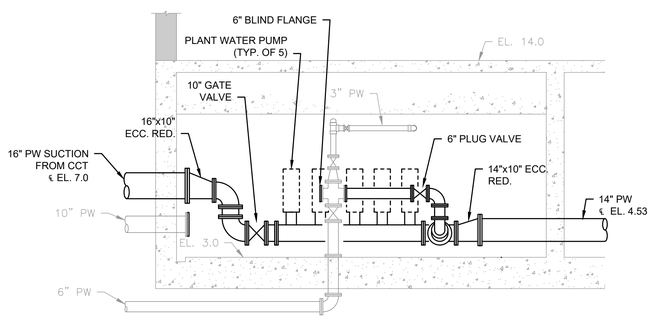

SECTION 1

SCALE: 1/4"= 1'-0" M-5.7

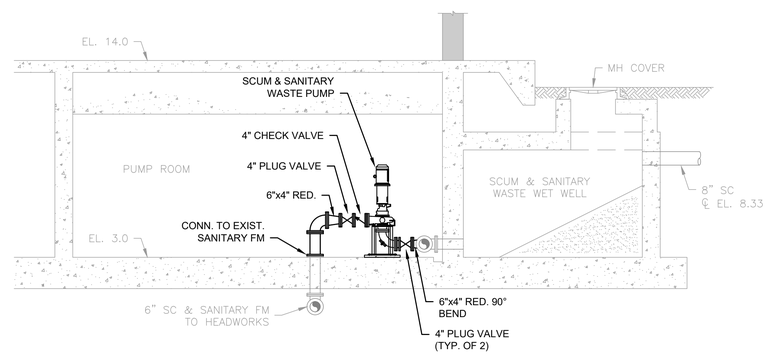

SECTION 2

SCALE: 1/4"= 1'-0" M-5.7

PREPARED BY

BETA
www.BETA-Inc.com

REGISTERED PROFESSIONAL

COMMONWEALTH OF MASSACHUSETTS
JOSEPH FEDERICO, JR.
No. 30860
REGISTERED PROFESSIONAL ENGINEER

SUBCONSULTANT

PROJECT

Taunton Wastewater Treatment Facility Improvements Phase 1

Taunton, MA

TITLE

Chemical Handling Building Plan & Sections

NO.	REVISIONS	DATE

DRAWN BY:	BM
DESIGNED BY:	BM
CHECKED BY:	SR
ISSUE DATE:	7/2/2021
BETA JOB NO.:	6050

SCALE

AS SHOWN

UNLESS OTHERWISE NOTED OR CHANGED BY REPRODUCTION

SHEET NO.

M-5.7

7/2/2021 10:35 AM J:\TAUNTON\WWTF DESIGN\AUTOCAD\PLAN SET\PHASE 1\CHEMICAL HANDLING BUILDING - PROP PLANS & SECTIONS.DWG (BETA STD BW CTB)

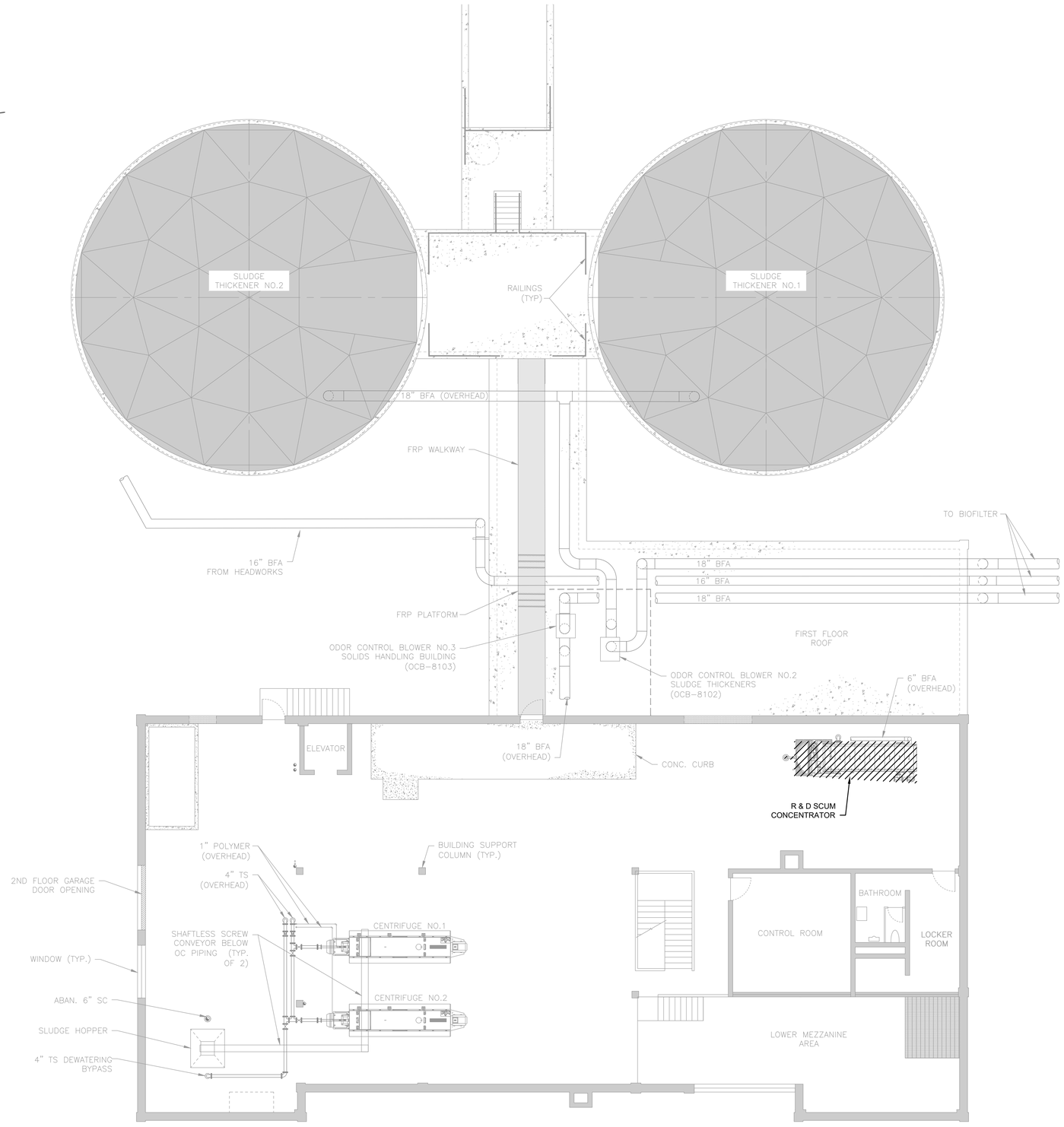

SECOND FLOOR - PLAN (EL. 65.0)

SCALE: 1/8"= 1'-0"

PREPARED BY

BETA
www.BETA-Inc.com

REGISTERED PROFESSIONAL

COMMONWEALTH OF MASSACHUSETTS
JOSEPH FEDERICO, JR.
No. 30663
REGISTERED PROFESSIONAL ENGINEER

SUBCONSULTANT

PROJECT

Taunton Wastewater Treatment Facility Improvements Phase 1

Taunton, MA

TITLE

Solids Handling Building Demolition Plan

NO.	REVISIONS	DATE

DRAWN BY:	BM
DESIGNED BY:	BM
CHECKED BY:	SR
ISSUE DATE:	7/2/2021
BETA JOB NO.:	6050

SCALE

AS SHOWN

UNLESS OTHERWISE NOTED OR CHANGED BY REPRODUCTION

SHEET NO.

M-7.1

7/2/2021 10:35 AM J:\TAUNTON\WWTF DESIGN\AUTOCAD\PLAN SET\PHASE 1\SOLIDS HANDLING BUILDING - EXIST PLANS & SECTIONS.DWG (BETA STD BW.CTB)

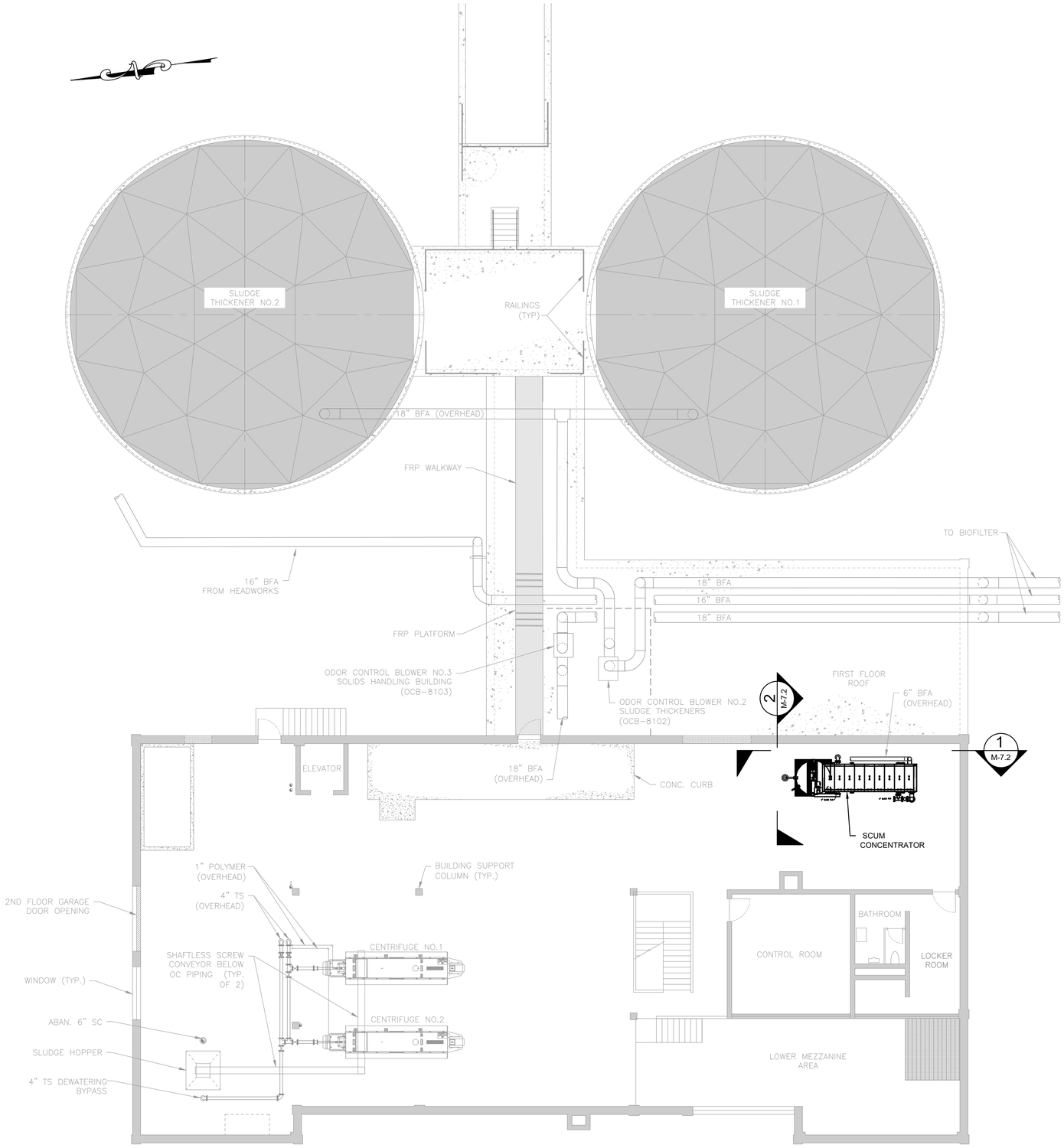

SECOND FLOOR - PLAN (EL. 65.0)

SCALE: 1/8"= 1'-0"

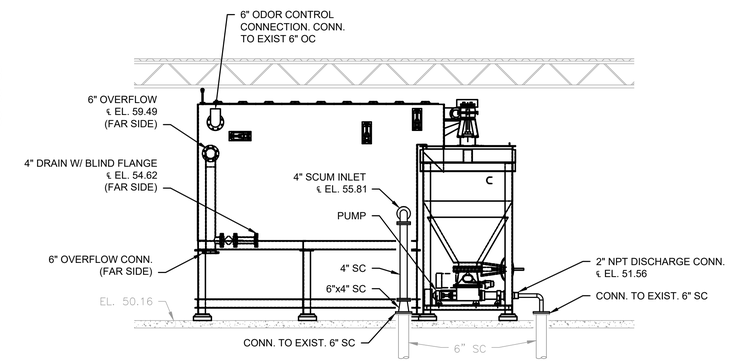

SECTION 1 M-7.2

SCALE: 1/4"= 1'-0"

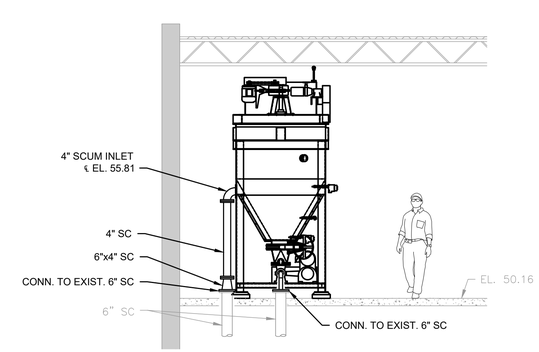

SECTION 2 M-7.2

SCALE: 1/4"= 1'-0"

PREPARED BY

BETA

www.BETA-Inc.com

REGISTERED PROFESSIONAL

COMMONWEALTH OF MASSACHUSETTS
JOSEPH FEDERICO, JR.
No. 30663
REGISTERED PROFESSIONAL ENGINEER

SUBCONSULTANT

PROJECT

Taunton Wastewater Treatment Facility Improvements Phase 1

Taunton, MA

TITLE

Solids Handling Building Plans & Sections

NO.	REVISIONS	DATE

DRAWN BY:	BM
DESIGNED BY:	BM
CHECKED BY:	SR
ISSUE DATE:	7/2/2021
BETA JOB NO.:	6050

SCALE

AS SHOWN

UNLESS OTHERWISE NOTED OR CHANGED BY REPRODUCTION

SHEET NO.

M-7.2

7/2/2021 10:36 AM J:\TAUNTON\WWTF DESIGN\AUTOCAD\PLAN SET\PHASE 1\SOLIDS HANDLING BUILDING - PROP. PLANS & SECTIONS.DWG (BETA STD BW.CTB)

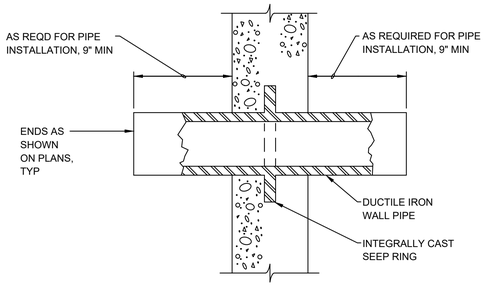

PExPE DUCTILE IRON WALL PIPE (401)

SCALE: NOT TO SCALE

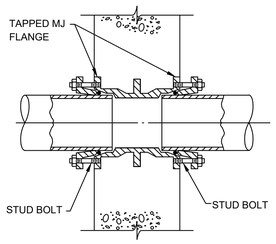

MJxMJ D.I. WALL PIPE (405)

SCALE: NOT TO SCALE

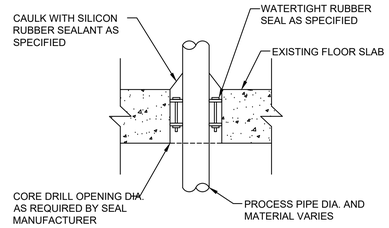

FLOOR PENETRATION FOR CORED HOLES IN WET AREAS (409)

SCALE: NOT TO SCALE

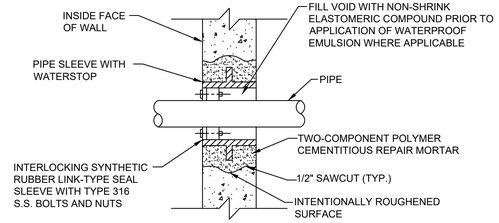

WALL SLEEVE/EXISTING WALL (413)

SCALE: NOT TO SCALE

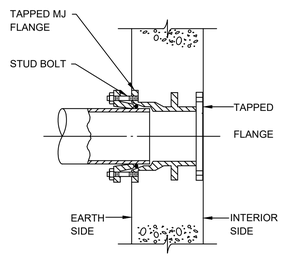

MJxFLUSH FLG D.I. WALL PIPE (402)

SCALE: NOT TO SCALE

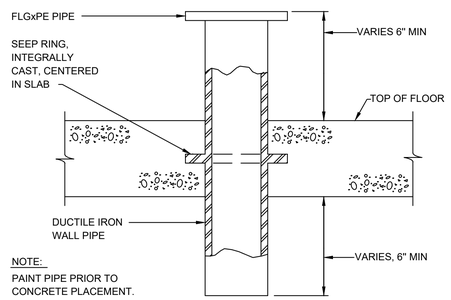

FLGxPE FLOOR PIPE (406)

SCALE: NOT TO SCALE

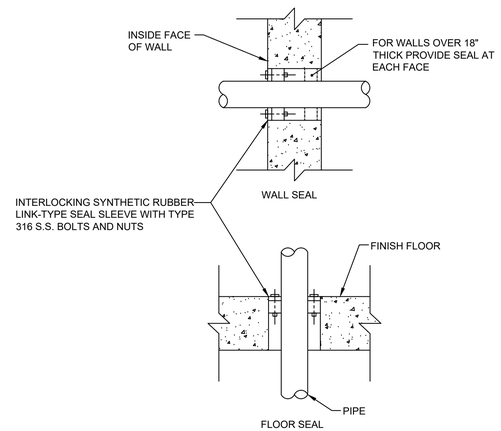

PENETRATION FOR CORED HOLES IN EXISTING WALLS OR FLOOR PENETRATIONS IN DRY AREAS (410)

SCALE: NOT TO SCALE

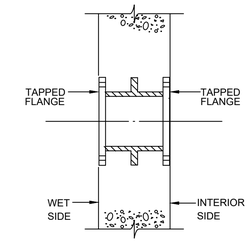

FLUSH FLGxFLUSH FLG D.I. WALL PIPE (414)

SCALE: NOT TO SCALE

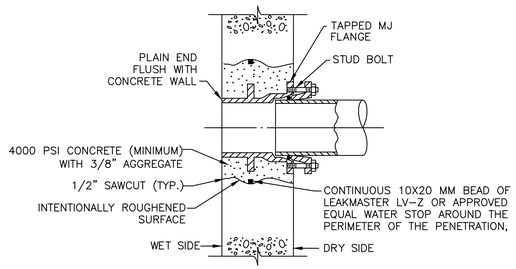

EXPANSION OF CORED HOLES/EXISTING WALLS (415)

SCALE: NOT TO SCALE

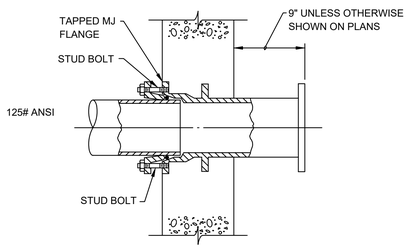

MJxFLG D.I. WALL PIPE (403)

SCALE: NOT TO SCALE

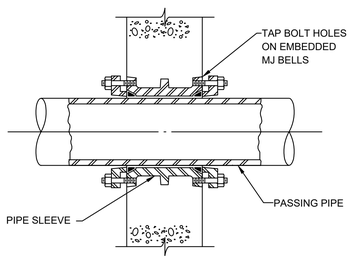

MJxMJ PIPE SLEEVE (407)

SCALE: NOT TO SCALE

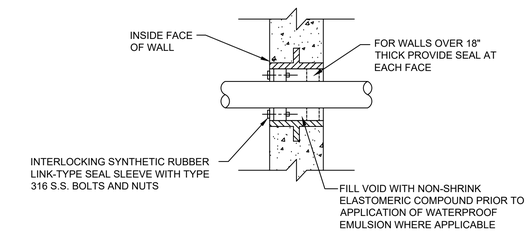

WALL SLEEVE/NEW CONCRETE (411)

SCALE: NOT TO SCALE

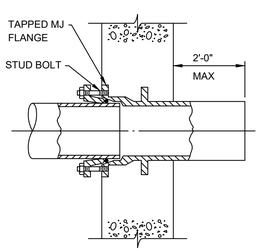

MJxPE D.I. WALL PIPE (404)

SCALE: NOT TO SCALE

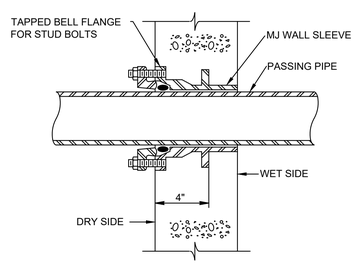

MJxPE WALL SLEEVE (408)

SCALE: NOT TO SCALE

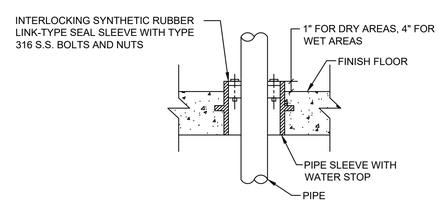

NOTE: FOR FLOOR SLEEVES, WHERE GASTIGHT OR WATERTIGHT SEALS ARE NOT REQUIRED, THE SEAL MAY BE OMITTED

FLOOR SLEEVE/NEW CONCRETE (412)

SCALE: NOT TO SCALE

PREPARED BY

BETA
www.BETA-Inc.com

REGISTERED PROFESSIONAL

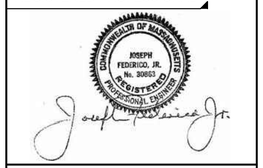

SUBCONSULTANT

PROJECT

Taunton Wastewater Treatment Facility Improvements Phase 1

Taunton, MA

TITLE

Mechanical Details I

NO.	REVISIONS	DATE

DRAWN BY:	BM
DESIGNED BY:	BM
CHECKED BY:	SR
ISSUE DATE:	7/2/2021
BETA JOB NO.:	6050

SCALE

AS SHOWN

UNLESS OTHERWISE NOTED OR CHANGED BY REPRODUCTION

SHEET NO.

MD-1

7/2/2021 10:36 AM J:\TAUNTON\WWTF DESIGN\AUTOCAD\PLAN SET\PHASE 1\MECHANICAL DETAILS.DWG (BETA STD BW.CTB)

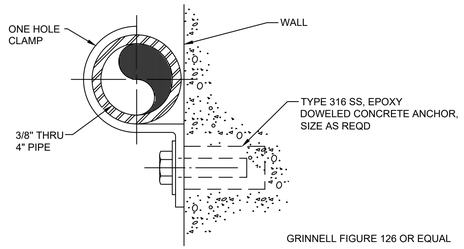

PIPE SUPPORT 416
SCALE: NOT TO SCALE

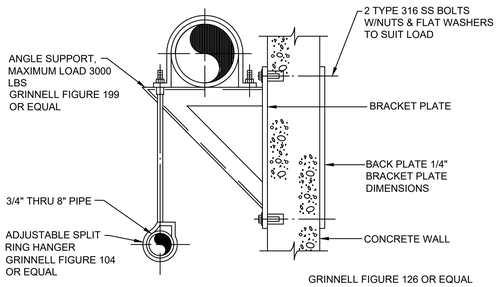

PIPE SUPPORT 417
SCALE: NOT TO SCALE

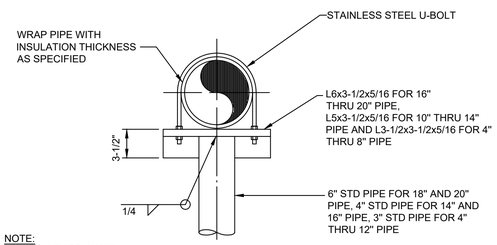

PIPE SUPPORT 418
SCALE: NOT TO SCALE

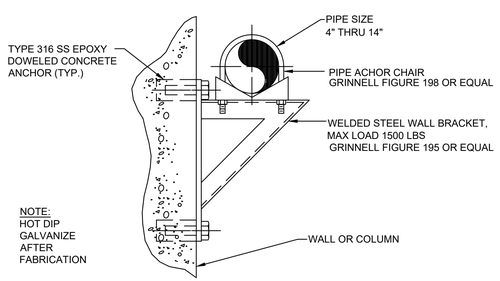

PIPE SUPPORT–MEDIUM 419
SCALE: NOT TO SCALE

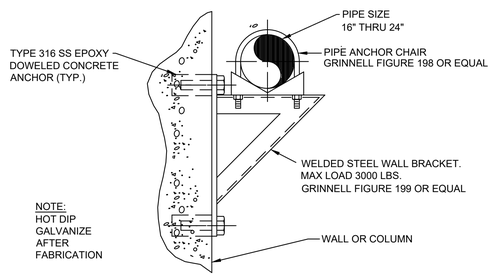

PIPE SUPPORT–HEAVY 420
SCALE: NOT TO SCALE

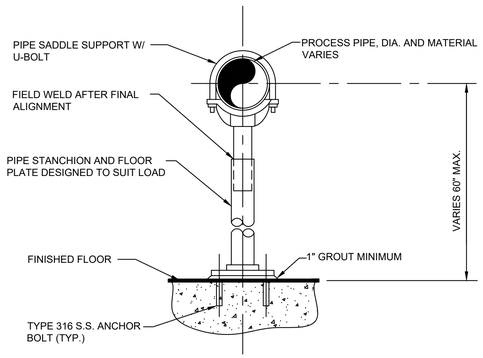

NOTES: 1. PROVIDE HALF-ROUND RIGID INSULATION WAND INSULATION SHIELD FOR INSULATED PIPING.

2. PROVIDE NEOPRENE ISOLATION PAD UNDER SUPPORT FOOT FOR ISOLATED PIPING OR WHEN SUPPORT IS ADJACENT TO MECHANICAL EQUIPMENT.

GRINNELL FIGURE 259 OR EQUAL

FLOOR PIPE SUPPORT 421
SCALE: NOT TO SCALE

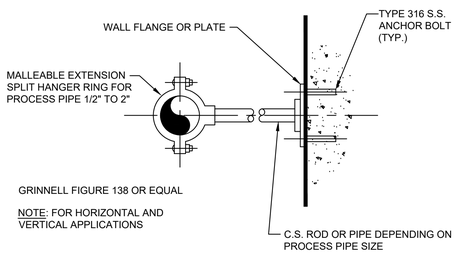

WALL PIPE SUPPORT 422
SCALE: NOT TO SCALE

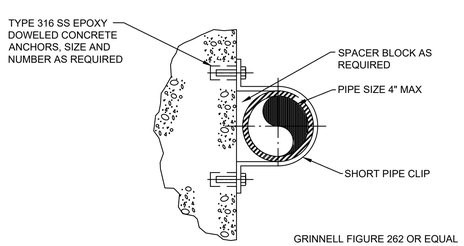

VERTICAL PIPE SUPPORT 423
SCALE: NOT TO SCALE

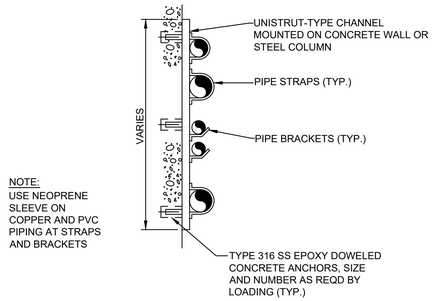

STACKED PIPE WALL SYSTEM 424
SCALE: NOT TO SCALE

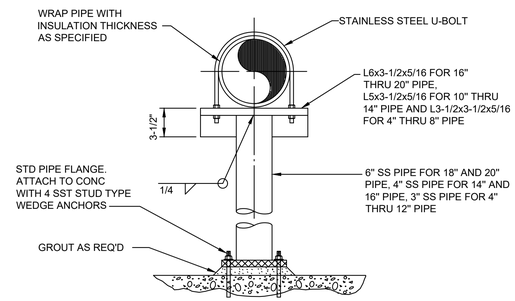

S.S. PIPE SUPPORT (SUBMERGED) 425
SCALE: NOT TO SCALE

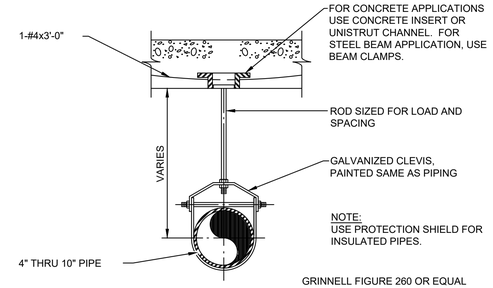

PIPE HANGER 426
SCALE: NOT TO SCALE

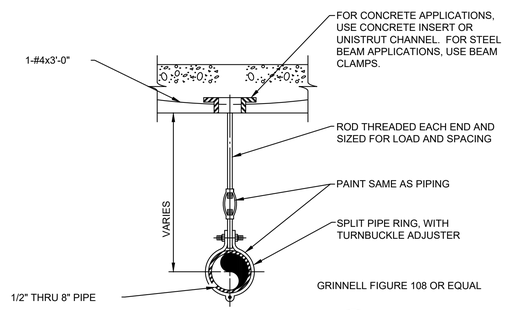

PIPE HANGER 427
SCALE: NOT TO SCALE

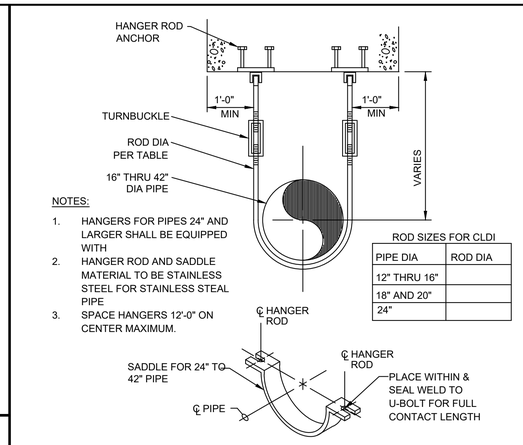

ROD SIZES FOR CLDI	
PIPE DIA	ROD DIA
12" THRU 16"	
18" AND 20"	
24"	

PIPE HANGER 428
SCALE: NOT TO SCALE

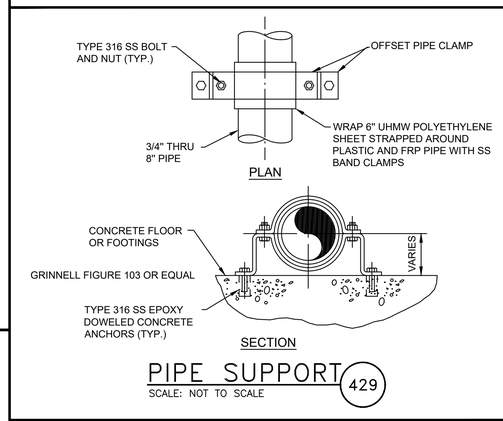

PIPE SUPPORT 429
SCALE: NOT TO SCALE

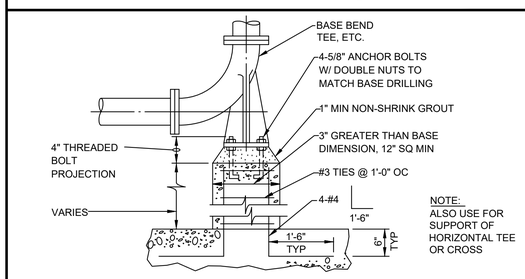

BASE BEND 430
SCALE: NOT TO SCALE

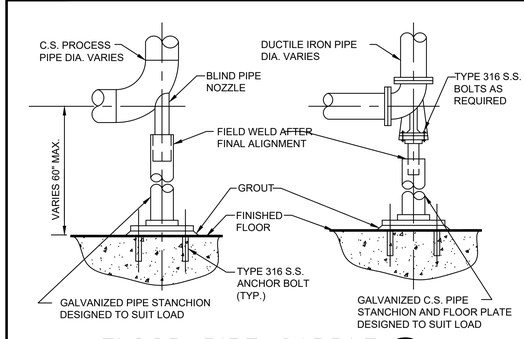

FLOOR PIPE SADDLE 431
SCALE: NOT TO SCALE

PREPARED BY

BETA
www.BETA-Inc.com

REGISTERED PROFESSIONAL

COMMONWEALTH OF MASSACHUSETTS JOSEPH FEDERICO, JR. No. 30663 REGISTERED PROFESSIONAL ENGINEER

SUBCONSULTANT

PROJECT

Taunton Wastewater Treatment Facility Improvements Phase 1

Taunton, MA

TITLE

Mechanical Details II

NO.	REVISIONS	DATE

DRAWN BY:	BM
DESIGNED BY:	BM
CHECKED BY:	SR
ISSUE DATE:	7/2/2021
BETA JOB NO.:	6050

SCALE

AS SHOWN

UNLESS OTHERWISE NOTED OR CHANGED BY REPRODUCTION

SHEET NO.

MD-2

7/2/2021 10:36 AM J:\TAUNTON\WWTF DESIGN\AUTOCAD\PLAN SET\PHASE 1\MECHANICAL DETAILS.DWG (BETA STD BW.CTB)

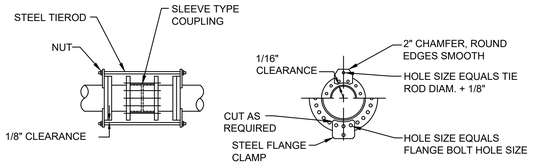

NOTE: TIERODS SHALL BE EQUALLY SPACED AROUND PIPE.

	TIERODS		FLANGE CLAMP			
PIPE SIZE	NO.	DIA.	THICKNESS	NO. OF FLANGE BOLTS PER CLAMP	"A"	"B"
6"	2	1/2"	1/2"	2	2"	7-3/4"
8"	2	5/8"	1/2"	2	2"	8-5/8"
10"	2	3/4"	1/2"	2	2"	7-3/4"
12"	2	1"	1/2"	2	2"	8-1/2"
14"	2	1-1/8"	3/4"	2	2"	9"
16"	2	1-1/4"	7/8"	2	2"	12-1/4"
18"	2	1-3/8"	7/8"	3	2-1/2"	13"
20"	2	1-3/8"	1"	3	2-1/2"	8"
24"	3	1-3/8"	1"	2	2-1/2"	8-3/4"
30"	4	1-3/4"	1"	2	2-1/2"	12-1/4"
36"	4	1-3/4"	1-1/4"	3	2-1/2"	8-1/2"
42"	6	1-3/4"	1-1/4"	2	2-1/2"	12-3/4"
48"	6	1-3/4"	1-1/4"	3	2-1/2"	12-1/2"
	8			3		

SLEEVE COUPLING RESTRAINT (150 PSI FLANGE CLAMP ASSEMBLY) 432

SCALE: NOT TO SCALE

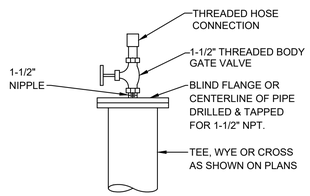

FLUSHING CONNECTION 433

SCALE: NOT TO SCALE

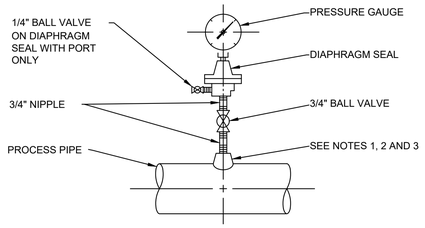

DIAPHRAGM PRESSURE GAUGE

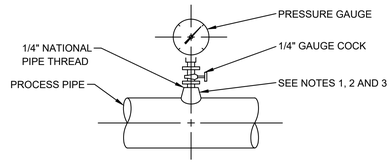

PRESSURE GAUGE

NOTES:

1. FOR STEEL, GALVANIZED STEEL, AND PVC 2 1/2" AND SMALLER USE A BUSHING IN A TEE.
2. FOR DUCTILE IRON AND FIBERGLASS REINFORCED PLASTIC PIPE, ALL SIZES, USE PIPE SADDLE WITH BUSHING.
3. FOR STEEL AND STAINLESS STEEL PIPES 3" AND LARGER, AND PRESSURE VESSELS, USE THRED-O-LET AS SHOWN.
4. PROVIDE SNUBBER FOR POSITIVE DISPLACEMENT PUMP INSTALLATIONS.

PRESSURE GAUGE MOUNTING DETAILS 434

SCALE: NOT TO SCALE

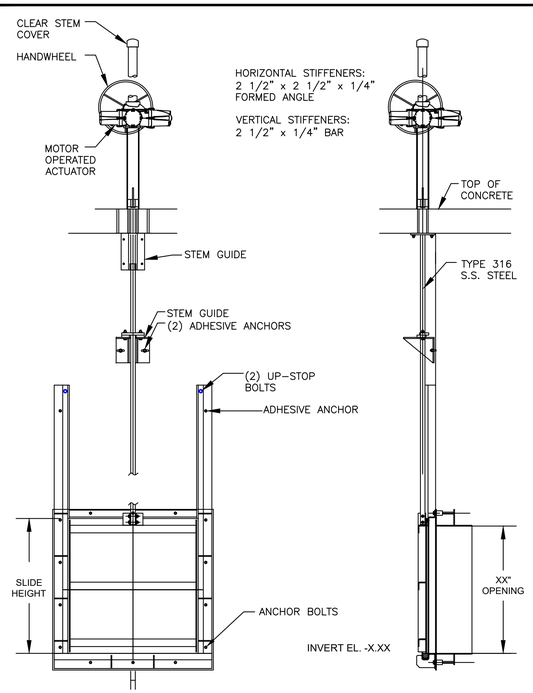

SLIDE GATE

SCALE: NOT TO SCALE

PREPARED BY

BETA
www.BETA-Inc.com

REGISTERED PROFESSIONAL

COMMONWEALTH OF MASSACHUSETTS
JOSEPH FEDERICO, JR.
No. 30663
REGISTERED PROFESSIONAL ENGINEER

SUBCONSULTANT

PROJECT

Taunton Wastewater Treatment Facility Improvements Phase 1

Taunton, MA

TITLE

Mechanical Details III

NO.	REVISIONS	DATE

DRAWN BY:	BM
DESIGNED BY:	BM
CHECKED BY:	SR
ISSUE DATE:	7/2/2021
BETA JOB NO.:	6050

SCALE

AS SHOWN

UNLESS OTHERWISE NOTED OR CHANGED BY REPRODUCTION

SHEET NO.

MD-3

7/2/2021 10:36 AM J:\TAUNTON\WWTF DESIGN\AUTOCAD\PLAN SET\PHASE 1\MECHANICAL DETAILS.DWG (BETA STD BW.CTB)