1/13/2021 12:45 PM W:\YEAR - 2018\18009.00 - TAUNTON WWTF UPGRADES\HVAC DEPARTMENT\PHASE 1A\18009.00 HVAC LEGEND SCHEDULE AND DETAILS-PHASE 1A.DWG (BETA STB BW.STB)

GENERAL NOTES

1. HVAC WORK IS INDICATED DIAGRAMMATICALLY. EXACT LOCATIONS OF ALL COMPONENTS ARE TO BE DETERMINED IN THE FIELD AND BY THE ACTUAL BUILDING CONDITIONS. EXISTING DUCTS, PIPING OR EQUIPMENT INTERFERING WITH OTHER INSTALLATIONS SHALL BE RELOCATED AS REQUIRED AT NO ADDITIONAL COST TO THE OWNER. EXACT LOCATIONS MUST HAVE THE APPROVAL OF THE ARCHITECT.
2. ALL WORK SHALL BE COORDINATED WITH ALL OTHER TRADES BEFORE ANY INSTALLATION IS MADE.
3. ALL EQUIPMENT SHALL BE INSTALLED IN ACCORDANCE WITH STATE CODES, MANUFACTURER'S APPROVED PUBLISHED LITERATURE, AND AUTHORITIES HAVING JURISDICTION.
4. INSTALLATION OF EQUIPMENT SHALL PERMIT ACCESSIBILITY FOR SERVICE AND/ OR REPLACEMENT.
5. ALL CEILING MOUNTED EQUIPMENT SHALL BE INSTALLED IN SUCH A WAY THAT LIGHTS, PIPING, AND DUCTWORK DO NOT BLOCK ACCESS TO UNITS AND RELATED ACCESSORIES.
6. HVAC CONTRACTOR SHALL COORDINATE ALL WALL, CEILING, FLOOR, ROOF AND BEAM PENETRATIONS WITH ARCHITECT AND STRUCTURAL ENGINEER.
7. ALL DUCT SIZES SHOWN ARE NET INSIDE CLEAR DIMENSIONS.
8. PROVIDE VOLUME DAMPERS AT EVERY MAIN BRANCH TAKE-OFF AND AS INDICATED AND IN SUCH OTHER LOCATIONS WHERE REQUIRED TO PROPERLY BALANCE THE SYSTEM. DO NOT INSTALL VOLUME DAMPERS IN NECKS OF DIFFUSERS OR AT DISCHARGE OR INLET GRILLES IN DUCTWORK.
9. PROVIDE INSTRUMENT TEST HOLES WITH CAPS IN AIR DISTRIBUTION SYSTEMS AS REQUIRED TO BALANCE SYSTEM.
10. HVAC CONTRACTOR SHALL BE RESPONSIBLE FOR ALL SHEETMETAL TRANSITIONS AT AIR TERMINAL UNITS, FANS, COILS, AND OTHER SIMILAR HVAC EQUIPMENT.
11. ALL OPEN ENDED DUCTS IN THE CEILING PLENUM SHALL BE UNOBSTRUCTED FOR A MINIMUM DISTANCE OF 24" FROM THE OPENING TO ALLOW FREE AIR FLOW AND SHALL HAVE 3/4" WIRE MESH SCREENING.
12. ALL TRANSFER DUCTS SHALL BE INTERNALLY LINED.
13. ALL MISCELLANEOUS STRUCTURAL SUPPORTS REQUIRED FOR HVAC EQUIPMENT INSTALLATION SHALL BE PROVIDED BY HVAC SUBCONTRACTOR.
14. EXACT LOCATION OF CEILING DIFFUSERS, GRILLES AND REGISTERS TO BE DETERMINED BY ARCHITECTURAL REFLECTED CEILING PLAN.
15. INSTALL ALL PIPING BELOW DUCTWORK UNLESS CLEARANCE CONDITION REQUIRES PIPING TO BE ABOVE.
16. EXACT ELEVATION FOR SIDE WALL DIFFUSERS, REGISTERS AND GRILLES SHALL BE APPROVED BY THE ARCHITECT BEFORE INSTALLATION.
17. UNLESS OTHERWISE NOTED, ALL PIPING RUNOUTS SHALL BE 3/4"
18. ALL EXPOSED EQUIPMENT (REGISTERS, UNIT HEATERS, ETC..) SHALL HAVE COLORS SELECTED BY THE ARCHITECT, UNLESS NOTED OTHERWISE.
19. HVAC SUBCONTRACTOR SHALL BLANK OFF AND INSULATE ALL UNUSED LOUVER AREA.
20. PITCH AIR INTAKE PLENUMS AND PROVIDE DRAIN TO NEAREST FLOOR DRAIN.
21. ALL REGISTERS, GRILLES AND DIFFUSERS LOCATED IN WALLS NEAR FLOOR SHALL BE HEAVY-DUTY TYPE DESIGNED TO WITHSTAND RUGGED IMPACT. REFER TO SCHEDULE. THE SECTION OF DUCTWORK BEHIND THE AIR DEVICE SHALL BE PAINTED FLAT BLACK.
22. EXACT LOCATION OF THERMOSTAT TO BE COORDINATED WITH FINAL LOCATION OF WALL MOUNTED ARCHITECTURAL AND ELECTRICAL EQUIPMENT.
23. ALL MAIN BRANCH PIPES FROM RISERS SHALL HAVE ISOLATION VALVES NEAR SHAFTS. PROVIDE SHUT-OFF VALVES AT EACH SUPPLY BRANCH AND COMBINATION BALANCING SHUT-OFF VALVE AT EACH RETURN BRANCH.
24. PROVIDE FLEXIBLE CONNECTOR ON INTAKES AND DISCHARGES OF ALL AIR HANDLING UNITS.
25. REFRIGERATION PIPING SIZED BY UNIT MANUFACTURER. SUBMIT CALCULATIONS TO ENGINEER FOR APPROVAL.
26. DUCT MOUNTED SMOKE DETECTOR – FURNISHED AND WIRED BY THE ELECTRICAL CONTRACTOR, INSTALLED BY THE HVAC CONTRACTOR.
27. ROOF OPENINGS SHALL BE SIZED FROM APPROVED SHOP DRAWINGS.
28. ALL FLOOR MOUNTED MECHANICAL EQUIPMENT, BOILERS, PUMPS, AIR HANDLERS, ETC. SHALL HAVE A CONCRETE PAD 4" HIGH AND 6" BEYOND EQUIPMENT FOOT PRINT ON ALL FOUR SIDES. CONCRETE PADS SHALL BE SIZE FROM APPROVED SHOP DRAWINGS.
29. ALL DAMPER MOTORS SHALL BE 24 VOLT.
30. PROVIDE DUCT MOUNTED SMOKE DAMPERS AT ALL SMOKE BARRIERS, REFER TO ARCH. DRAWINGS FOR LOCATION. SMOKE DAMPERS SHALL BE CLOSED AND ASSOCIATED EXH. FAN OR AHU SHALL BE SHUT-DOWN UPON DETECTION OF SMOKE AS SENSED BY AREA SMOKE DETECTORS. DAMPERS SHALL BE RUSKIN TYPE SD 60 OR EQUAL.

DEMOLITION NOTES

1. UNLESS OTHERWISE NOTED, ALL EXISTING HVAC SYSTEMS WITHIN HATCH MARKS (HOT WATER SUPPLY, HOT WATER RETURN, SUPPLY DUCTWORK, EXHAUST DUCTWORK, ETC) AND ASSOCIATED EQUIPMENT IS TO BE DEMOLISHED OR SALVAGED. REMOVE THE EQUIPMENT TO BE DEMOLISHED OR SALVAGED PER SECTION 02050. ALL CONTROL DEVICES ASSOCIATED WITH THE DEMOLISHED EQUIPMENT SHALL BE REMOVED.
2. NO PIPING, DUCTWORK OR EQUIPMENT INDICATED FOR DEMOLITION WILL BE REUSED OR SALVAGED UNLESS SPECIFICALLY NOTED AS SUCH. ALL EQUIPMENT REMOVED SHALL BE REMOVED FROM SITE AND PROPERLY DISPOSED OF, PRIOR TO REMOVAL OF EQUIPMENT COORDINATE WITH OWNER FOR ANY EQUIPMENT THE OWNER WILL KEEP.
3. EXISTING EQUIPMENT INDICATED ON THE DEMOLITION PLANS ARE BASED ON SITE OBSERVATIONS AND IT IS NOT THE INTENTION OF THESE DRAWINGS TO SHOW ALL EQUIPMENT AND MATERIALS TO BE DISCONNECTED AND/OR REMOVED.

ABBREVIATIONS

ACD	AUTOMATIC CONTROL DAMPER
AD	ACCESS DOOR
AFF	ABOVE FINISHED FLOOR
AHAP	AS HIGH AS POSSIBLE
AP	ACCESS PANEL
ARCH	ARCHITECT
ATC	AUTOMATIC TEMPERATURE CONTROL
BDD	BACKDRAFT DAMPER
BTU	BRITISH THERMAL UNIT
BTUH	BRITISH THERMAL UNIT PER HOUR
BOD	BOTTOM OF DUCT
CAP	CAPACITY
CD	CEILING DIFFUSER
CFM	CUBIC FEET PER MINUTE
CO	CLEANOUT
CONT	CONTROLLER
CP	CUT AND CAP
DIA	DIAMETER
DB	DRY BULB TEMPERATURE
DC	DUST COLLECTOR
DDC	DIRECT DIGITAL CONTROL
DN	DOWN
DWG	DRAWING
DX	DIRECT EXPANSION COOLING
EA	EXHAUST AIR
EAT	ENTERING AIR TEMPERATURE
EBB	ELECTRIC BASEBOARD RADIATION
ECH	ELECTRIC CABINET HEATER
ECON	AIR-SIDE ECONOMIZER
EF	EXHAUST FAN
EFF	EFFICIENCY
ELV	ELEVATION
ER	EXHAUST REGISTER
ESP	EXTERNAL STATIC PRESSURE
ETR	EXISTING TO REMAIN
EWT	ENTERING WATER TEMPERATURE
EXH	EXHAUST
FA	FREE AREA
FD	FIRE DAMPER
FLA	FULL LOAD AMPS
FOB	FLAT ON BOTTOM
FOT	FLAT ON TOP
FPI	FINS PER INCH
FPM	FEET PER MINUTE
FT	FEET
FTR	FINNED TUBE RADIATION
GAL	GALLONS
GALV	GALVANIZED
GC	GENERAL CONTRACTOR
GF	GLYCOL FEED
GPM	GALLONS PER MINUTE
HP	HORSEPOWER
HVAC	HEATING, VENTILATING AND AIR CONDITIONING
HGRH	HOT GAS REHEAT
HW	HOT WATER
HZ	HERTZ
IN	INCHES
KE	KITCHEN EXHAUST
KW	KILOWATTS
LAT	LEAVING AIR TEMPERATURE
LD	LINEAR DIFFUSER
LF	LINEAR FEET
LWT	LEAVING WATER TEMPERATURE
MBH	THOUSANDS OF BTU'S PER HOUR
MCC	MOTOR CONTROL CENTER
NC	NORMALLY CLOSED
NIC	NOT IN CONTRACT
NO	NORMALLY OPEN
NTS	NOT TO SCALE
OA	OUTSIDE AIR
OAT	OUTSIDE AIR TEMPERATURE
OBD	OPPOSED BLADE DAMPER
OD	OUTSIDE DIAMETER
OED	OPEN ENDED DUCT
POS	PROVIDED UNDER OTHER SECTIONS
PSI	POUNDS PER SQUARE INCH (GAUGE)
PD	PRESSURE DROP
PRV	PRESSURE REDUCING VALVE
PG	PROPYLENE GLYCOL
R	RETURN
RA	RETURN AIR
RB	REBALANCE
RF	RETURN/EXHAUST FAN
RG	RETURN GRILLE
RM	ROOM
RPM	REVOLUTIONS PER MINUTE
RR	RETURN REGISTER
S	SUPPLY
SA	SUPPLY AIR
SAT	SUPPLY AIR TEMPERATURE
SF	SQUARE FEET, SUPPLY FAN
SP	STATIC PRESSURE
SR	SUPPLY REGISTER
SS	STAINLESS STEEL
STL	STEEL
TYP	TYPICAL
UC	UNDERCUT DOOR
V	VOLTS
VAV	VARIABLE AIR VOLUME
VD	VOLUME DAMPER
VFD	VARIABLE FREQUENCY DRIVE
W/	WITH
W/O	WITHOUT
WB	WET BULB TEMPERATURE
WG	WATER GAUGE
WMS	WIRE MESH SCREEN

PIPING LEGEND

—CD—	CONDENSATE DRAIN
—HWS—	HOT WATER SUPPLY
—HWR—	HOT WATER RETURN
—RL—	REFRIGERANT LIQUID
—RS—	REFRIGERANT SUCTION

EQUIPMENT TAG SYMBOLS & ABBREVIATIONS

EQUIPMENT NOT REQUIRING ELECTRIC SERVICE → TAG / NO → SEE SCHEDULE FOR PERFORMANCE REQUIREMENTS ← TAG / NO ← EQUIPMENT REQUIRING ELECTRIC SERVICE

FTR-1 / MBH / LENGTH — FINNED TUBE RADIATION

ACCU	AIR COOLED CONDENSING UNIT
AHU	AIR HANDLING UNIT
AF	AIR FILTER
AS	AIR SEPARATOR
B	BOILER
CC	COOLING COIL
CH	CHILLER
CUH	CABINET UNIT HEATER
C	CONVECTOR
EF	EXHAUST FAN
ERV	ENERGY RECOVERY VENTILATOR
ET	EXPANSION TANK
EUH	ELECTRIC UNIT HEATER
FCU	FAN COIL UNIT
FMS	FLOW MEASURING STATION
FTR	FIN-TUBE RADIATION
HC	HEATING COIL
HP	HEAT PUMP
HRU	HEAT RECOVERY UNIT
HV	HEATING AND VENTILATING UNIT
IRV	INTAKE ROOF VENT
MAU	MAKEUP AIR UNIT
P	PUMP
REF	RETURN/EXHAUST FAN
RF	RETURN FAN
RTU	ROOFTOP UNIT
SA	SOUND ATTENUATOR
SF	SUPPLY FAN
TU	TERMINAL UNIT
UH	UNIT HEATER
UV	UNIT VENTILATOR
VAV	VARIABLE AIR VOLUME UNIT

RB / 2000 — REBALANCE EXISTING CFM TO INDICATED AMOUNTED

INSTRUMENTATION

PI	LOCAL PRESSURE GAUGE W/SHUTOFF AND SNUBBER
DPI	DIFFERENTIAL PRESSURE GAUGE W/SHUTOFFS AND SNUBBERS
TI	LOCAL TEMPERATURE INDICATION
Th	HEATING ONLY THERMOSTAT
Tc	COOLING ONLY THERMOSTAT
T	HEATING/COOLING THERMOSTAT
TT	TEMPERATURE TRANSMITTER
PT	PRESSURE TRANSMITTER
SD	SMOKE DETECTOR
HD	HEAT DETECTOR
FT	FLOW TRANSMITTER
SP	STATIC PRESSURE SENSOR
H	HUMIDITY SENSOR OR HUMIDISTAT
CO2	CARBON DIOXIDE DETECTOR
CO	CARBON MONOXIDE DETECTOR
OS	OCCUPANCY SENSOR
PS	PRESSURE SENSOR SWITCH

VALVES AND ACCESSORIES

- GATE VALVE
- BALL VALVE
- BALL VALVE WITH HOSE BIBB, CAP & CHAIN
- BUTTERFLY VALVE
- GLOBE VALVE
- PRESSURE REDUCING VALVE (SELF-CONTAINED)
- BACKPRESSURE REGULATOR (SELF-CONTAINED)
- CHECK VALVE (SWING TYPE)
- CHECK VALVE (SILENT TYPE)
- STRAINER W/BALL VALVE, HOSE BIBB & CAP (GATE VALVE FOR STEAM)
- ANGLE VALVE
- BUTTERFLY VALVE, TWO POSITION ACTUATOR
- BALL VALVE, TWO POSITION ACTUATOR
- SOLENOID VALVE
- TWO-WAY AUTOMATIC CONTROL VALVE, MODULATING ACTUATOR
- TWO-WAY AUTOMATIC CONTROL VALVE, TWO POSITION ACTUATOR
- THREE-WAY AUTOMATIC CONTROL VALVE, MODULATING ACTUATOR
- THREE-WAY AUTOMATIC CONTROL VALVE, TWO POSITION ACTUATOR
- AUTOMATIC FLOW CONTROL VALVE (PRESSURE INDEPENDENT)
- COMBINATION FLOWMETER/SHUT OFF/BALANCING VALVE
- FLOW SWITCH
- FLOW METER
- SAFTEY RELIEF VALVE
- UNION OR FLANGE (SEE SPEC)
- BLIND FLANGE
- END CAP
- VB — VACUUM BREAKER
- PT — PRESSURE/TEMPERATURE WELL
- AAV — AUTOMATIC AIR VENT WITH ISOLATION VALVE
- MAV — MANUAL AIR VENT
- REDUCER (ECCENTRIC-FLAT ON BOTTOM OR FLAT ON TOP)
- REDUCER (CONCENTRIC)
- FLEXIBLE CONNECTION
- EXPANSION JOINT
- PIPE GUIDE
- ANCHOR
- RISE (SINGLE LINE – PLAN VIEW)
- DROP (SINGLE LINE – PLAN VIEW)
- TOP TAKEOFF
- BOTTOM TAKEOFF
- PIPE BREAK (SINGLE LINE)
- DIRT LEG
- CLEAN-OUT FOR CONDENSATE DRAIN
- RISE (DOUBLE LINE – PLAN VIEW)
- DROP (DOUBLE LINE – PLAN VIEW)
- PIPE BREAK (DOUBLE LINE)
- DIRECTION OF FLOW IN PIPE
- UP — PITCH PIPE UP IN DIRECTION OF FLOW
- DN — PITCH PIPE DOWN IN DIRECTION OF FLOW
- FINNED TUBE WITH NO ENCLOSURE
- FINNED TUBE WITH WITH ENCLOSURE

FLOW DIAGRAM EQUIPMENT SYMBOLS

- CENTRIFUGAL PUMP
- POSITIVE DISPLACEMENT PUMP
- FILTER (WATER SERVICE)
- SUCTION DIFFUSER W/STRAINER
- * / C — coil:
  - * H = HEATING COIL
  - C = COOLING COIL
  - RH = REHEAT COIL
  - PH = PREHEAT COIL
  - DX = DIRECT EXPANSION COIL
- ET / 1 — EXPANSION TANK
- AAV, AS / 1 — AIR SEPARATOR

DUCTWORK LEGEND/SYMBOLS

- 12"x"10 — RECTANGULAR DUCTWORK – FIRST DIMENSION IS SIDE SHOWN (IN.) FREE AREA
- 12"ø — ROUND DUCT DIAMETER (IN.)
- SUPPLY/OUTSIDE AIR DUCTWORK UP
- SUPPLY/OUTSIDE AIR DUCTWORK DOWN
- RETURN/EXHAUST AIR DUCTWORK UP
- RETURN/EXHAUST AIR DUCTWORK DOWN
- FLEXIBLE CONNECTION
- ACOUSTICALLY LINED DUCTWORK
- R — CHANGE OF ELEVATION IN DIRECTION OF AIRFLOW (R)RISE,(D)DROP
- 12x10 — RECTANGULAR DUCT TRANSITION
- 12x10, 8x6 — RECTANGULAR TO SINGLE LINE TRANSITION
- 12x10, 10ø — RECTANGULAR TO ROUND TRANSITION
- MITERED ELBOW W/ TURNING VANES
- SUPPLY AIR DIFFUSER BELOW DUCT
- RETURN OR EXHAUST REGISTER BELOW DUCT
- ROUND DUCT UP
- SUPPLY AIR DIFFUSER (SQUARE OR RECTANGULAR)
- SUPPLY AIR DIFFUSER (LINEAR)
- RETURN AIR GRILLE OR REGISTER
- VD — MANUAL VOLUME DAMPER
- FD — SELF-CLOSING FIRE DAMPER W/ACCESS DOOR
- SD — SMOKE DAMPER W/ACCESS DOOR
- ACD — AUTOMATIC CONTROL DAMPER
- SFD — COMBINATION SMOKE/FIRE DAMPER W/ACCESS DOOR
- SUPPLY AIR BLOW DIRECTION
- EXHAUST / RETURN / OR INTAKE

DIFFUSER/REGESTER TAG

- TT-X — TYPE-BLOW (CD-1 = CEILING DIFFUSER)
- 0000 — CFM
- 0"x0" — SIZE

- INLINE CENTRIFUGAL FAN
- ROOF FAN OR VENT
- TERMINAL UNIT (COOLING ONLY)
- TERMINAL UNIT (HEATING/COOLING)
- EXHAUST FAN (SHOWN ON ROOF PLAN)
- EXHAUST FAN (SHOWN ON FLOOR PLAN)

SINGLE LINE DUCTWORK

- DUCTWORK
- SUPPLY/OUTSIDE AIR DUCTWORK UP
- SUPPLY/OUTSIDE AIR DUCTWORK DOWN
- RETURN/EXHAUST AIR DUCTWORK UP
- RETURN/EXHAUST AIR DUCTWORK DOWN
- RECTANGULAR DUCTWORK W/ ACOUSTICAL LINING
- FLEXIBLE CONNECTION
- DUCT TRANSITION
- 90° TAKE OFF
- 90° ELBOW
- BULLHEAD SPLIT SUPPLY/RETURN

PREPARED BY

BETA
www.BETA-Inc.com

REGISTERED PROFESSIONAL

COMMONWEALTH OF MASSACHUSETTS — ROBERT H. BROWN — MECHANICAL — NO. 49935 — REGISTERED PROFESSIONAL ENGINEER

SUBCONSULTANT

SAR ENGINEERING, INC.
Mechanical/Electrical Engineers
150 Grossman Drive, Suite 309
Braintree, Massachusetts 02184
617 328-9215
web: www.sar.com

PROJECT

Taunton Wastewater Treatment Facility Improvements Solids Handling

Taunton, MA

TITLE

Hvac Legend and General Notes

AS RE-ISSUED PER ADDENDUM #2

NO.	REVISIONS	DATE

DRAWN BY:	RLB
DESIGNED BY:	RHB
CHECKED BY:	RHB
ISSUE DATE:	10/16/2020
BETA JOB NO.:	6050

SCALE

NONE

UNLESS OTHERWISE NOTED OR CHANGED BY REPRODUCTION

SHEET NO.

H-0.1

ENERGY RECOVERY UNIT SCHEDULE (PART 1)

ERV –

TAG NO.	BUILDING	SUPPLY AIR PERFORMANCE: SUPPLY IN CFM	MIN. OA IN CFM	ESP (IN WC)	TSP (IN WC)	FAN RPM	OPERATING POWER HP	MOTOR SIZE HP	EXHAUST AIR NORMAL PERFORMANCE: EXH./RET. OUT CFM	E.S.P. IN (W.C.)	TOTAL SP IN (W.C.)	FAN RPM	OPERATING POWER HP	MOTOR SIZE HP
7ERV–1	SOLID HANDLING BLDG. 1ST FLOOR	13,500	13,500	1.5	3.76	2265	(2) 7.46	(2) 7.5	13,500	1.5	3.282	2465	(2) 9.39	(2) 10
7ERV–2	SOLID HANDLING BLDG. 1ST FLOOR	11,900	11,900	1.5	3.385	2120	(2) 6.29	(2) 7.5	11,900	1.5	3.006	2252	(2) 7.18	(2) 7.5
7ERV–3	SOLID HANDLING BLDG. 2ND FLOOR	9,100	9,100	0.90	2.7	2197	(2) 3.52	(2) 5	9,100	0.60	2.521	2342	(2) 4.24	(2) 5
7ERV–4	SOLID HANDLING BLDG. 2ND FLOOR	9,100	9,100	0.90	2.7	2197	(2) 3.52	(2) 5	9,100	0.60	2.521	2342	(2) 4.24	(2) 5

TAG NO.	DX COOLING COIL: REFRIG TYPE	TOTAL MBH	SENSIBLE MBH	ROWS	EAT (DB °F)	EAT (WB °F)	LAT (DB °F)	LAT (WB °F)	HEATING COIL: CAPACITY (MBH)	GPM	EAT (DB °F)	LAT (DB °F)	EWT (DB °F)	LWT (DB °F)	% GLYCOL	WPD (FT)	APD (IN WC)
7ERV–1	N/A	N/A	N/A	N/A	N/A	N/A	N/A	N/A	787.9	84.7	46.7	100.6	180	160	40% P.G.	9.4	0.144
7ERV–2	N/A	N/A	N/A	N/A	N/A	N/A	N/A	N/A	717.6	77.2	48.8	104.5	180	160	40% P.G.	7.9	0.12
7ERV–3	N/A	N/A	N/A	N/A	N/A	N/A	N/A	N/A	343.6	37.0	53.1	87.9	180	160	40% P.G.	6.2	0.037
7ERV–4	N/A	N/A	N/A	N/A	N/A	N/A	N/A	N/A	343.6	37.0	53.1	87.9	180	160	40% P.G.	6.2	0.037

TAG NO.	ELECTRICAL DATA: MCA	MOCP	V	PHASE	HZ	WEIGHT LBS	SUPPLY FILTER	OUTDOOR FILTER
7ERV–1	48.2	60	480	3	60	5,307	MERV–6	MERV–8
7ERV–2	41.9	50	480	3	60	5,259	MERV–6	MERV–8
7ERV–3	28.7	35	480	3	60	5,089	MERV–6	MERV–8
7ERV–4	28.7	35	480	3	60	5,089	MERV–6	MERV–8

ENERGY RECOVERY UNIT SCHEDULE (PART 2)

ERV –

TAG NO.	ENERGY RECOVERY WHEEL PERFORMANCE: WINTER CONDITIONS DESIGN: OUTDOOR DB °F	OUTDOOR WB °F	INDOOR DB °F	INDOOR RH%	SUMMER CONDITIONS DESIGN: OUTDOOR DB °F	OUTDOOR WB °F	INDOOR DB °F	INDOOR RH%	MANUFACTURER MODEL NUMBER	REMARKS
7ERV–1	7.4	5.3	46.7	50	90.8	76.2	80.7	50	GREENHECK RVE–120–74–30H	①②③④⑤⑥⑦⑧⑨⑩
7ERV–2	7.4	5.3	48.8	50	90.8	76.2	80.2	50	GREENHECK RVE–120–74–30H	①②③④⑤⑥⑦⑧⑨⑩
7ERV–3	7.4	5.3	53.1	50	90.8	76.2	79.2	50	GREENHECK RVE–120–74–30H	①②③④⑤⑥⑦⑧⑨⑩
7ERV–4	7.4	5.3	53.1	50	90.8	76.2	79.2	50	GREENHECK RVE–120–74–30H	①②③④⑤⑥⑦⑧⑨⑩

① BASE RAILS ② LOW LEAKAGE DAMPERS ③ RECIRC. DAMPER ④ FACTORY SUPPLY & EXHAUST FAN VFD ⑤ ENERGY BYPASS WHEEL DAMPER
⑥ FACTORY MOUNTED DISCONNECT ⑦ SINGLE POINT POWER CONNECTION ⑧ COORDINATE SUPPLY & EXHAUST DISCHARGE WITH FLOOR PLANS
⑨ INSTALLED INDOORS ⑩ AIR FLOW STATIONS

MAKE-UP AIR UNIT SCHEDULE

MUA

TAG NO.	LOCATION	SUPPLY BLOWER: OA CFM	TSP (IN WC)	ESP (IN WC)	FAN BHP	FAN HP	HEATING COIL: CAPACITY (MBH)	GPM	EAT (DB °F)	LAT (DB °F)	EWT (DB °F)	LWT (DB °F)	% GLYCOL	WPD (FT)	ELECTRICAL DATA: FLA	MOP	V	PH	HZ	WEIGHT LBS	MANUFACTURER MODEL NUMBER	REMARKS
7MUA–1	SOLID HANDLING BLDG. 1ST FLOOR	4,000	1.71	1.4	3.29	5	372.7	32.6	7	83	180	160	40% P.G.	13	7.6	20	480	3	60	–	GREENHECK LFC–85–FC–50	①②③④⑤⑥

① BASE RAILS ② FACTORY MOUNTED DISCONNECT ③ SINGLE POINT POWER CONNECTION ④ VFD RATED MOTOR ⑤ INSTALLED INDOORS ⑥ AIR FLOW STATION

BOILER SCHEDULE

B

TAG NO.	BUILDING	OUTPUT CAPACITY (NET IBR) MBH	FIRING RATE OIL (GPH)	EFFICIENCY: COMBUSTION	THERMAL	OPERATING PRESSURE (PSIG)	WATER: EWT (°F)	LWT (°F)	GPM	% GLYCOL	WPD (FT)	ELECTRICAL DATA: HP	V	PH	HZ	WEIGHT (LBS)	MANUFACTURER MODEL NUMBER	REMARKS
7 B–1	SLUDGE HANDLING	2506	20.7	88.4	88.4	–	180	160	300	40% P.G.	–	2	208	1	60	–	BURHAM MPC15	POWER FLAME C3–0

PUMP SCHEDULE

P

TAG NO.	BUILDING	SYSTEM SERVED	TYPE	GPM	HEAD (FT.)	GLYCOL	FLUID TEMP °F	RPM	ELECTRICAL DATA: MOTOR HP	V	PH	HZ	MANUFACTURER MODEL NUMBER	REMARKS
7HWP–1	SLUDGE HANDLING	H.W.	END	300	60	40% P.G.	180	1725	7.5	480	3	60	TACO 2510C	①
7HWP–2	SLUDGE HANDLING	H.W.	END	300	60	40% P.G.	180	1725	7.5	480	3	60	TACO 2510C	①

① VFD RATED MOTOR

EXPANSION TANK SCHEDULE

ET

TAG NO.	BUILDING	SERVICE	SYS TEMP (°F) MIN	SYS TEMP (°F) MAX	SYS PRESS (PSIG) MIN	SYS PRESS (PSIG) MAX	TANK ACCEPTANCE VOLUME (GAL)	TANK AIR CHARGE (PSIG)	MANUFACTURER MODEL NUMBER	REMARKS
7 ET–1	SLUDGE HANDLING	H.W.	50	180	15	150	61	12	TACO CBX–425	–

PREPARED BY

BETA
www.BETA-Inc.com

REGISTERED PROFESSIONAL

SUBCONSULTANT

SAR ENGINEERING, INC.
Mechanical/Electrical Engineers
150 Grossman Drive, Suite 309
Braintree, Massachusetts 02184
617 328-9215
web: www.sar.com

PROJECT

Taunton Wastewater Treatment Facility Improvements Solids Handling

Taunton, MA

TITLE

Hvac Schedules

AS RE-ISSUED PER ADDENDUM #2

NO.	REVISIONS	DATE

DRAWN BY:	RLB
DESIGNED BY:	RHB
CHECKED BY:	RHB
ISSUE DATE:	10/16/2020
BETA JOB NO.:	6050

SCALE

NONE

UNLESS OTHERWISE NOTED OR CHANGED BY REPRODUCTION

SHEET NO.

H-0.2

1/13/2021 12:45 PM W:\YEAR - 2018\18009.00 - TAUNTON WWTF UPGRADES\HVAC DEPARTMENT\PHASE 1A\18009.00 HVAC LEGEND SCHEDULE AND DETAILS-PHASE 1A.DWG (BETA STB BW.STB)

UH — HOT WATER UNIT HEATER HEATER SCHEDULE

TAG NO.	SERVICE	CFM	MBH	WATER SIDE					ELECTRICAL DATA					MANUFACTURER MODEL NUMBER	REMARKS
				GPM	% GLYCOL	WPD (FT)	EWT (°F)	LWT (°F)	HP	FLA	V	PH	HZ		
7UH-1	SOLID HANDLING BLDG. 1ST FLOOR	1,120	32.8	3.3	40 P.G.	0.2	180	160	1/10	0.70	120	1	60	RITTLING MODEL RH-63	–
7UH-2	SOLID HANDLING BLDG. 1ST FLOOR	730	23.9	2.4	40 P.G.	0.1	180	160	1/15	0.72	120	1	60	RITTLING MODEL RH-47	–
7UH-3	SOLID HANDLING BLDG. 1ST FLOOR	630	17.3	1.7	40 P.G.	0.1	180	160	1/15	0.72	120	1	60	RITTLING MODEL RH-33	–
7UH-4	SOLID HANDLING BLDG. 1ST FLOOR	630	17.3	1.7	40 P.G.	0.1	180	160	1/15	0.72	120	1	60	RITTLING MODEL RH-33	–
7UH-5	SOLID HANDLING BLDG. 1ST FLOOR	1,550	57.2	5.7	40 P.G.	0.4	180	160	1/8	1.58	120	1	60	RITTLING MODEL RH-108	–
7UH-6	SOLID HANDLING BLDG. 1ST FLOOR	1,550	57.2	5.7	40 P.G.	0.4	180	160	1/8	1.58	120	1	60	RITTLING MODEL RH-108	–
7UH-7	SOLID HANDLING BLDG. 1ST FLOOR	1,550	57.2	5.7	40 P.G.	0.4	180	160	1/8	1.58	120	1	60	RITTLING MODEL RH-108	–
7UH-8	SOLID HANDLING BLDG. 2ND FLOOR	630	17.3	1.7	40 P.G.	0.1	180	160	1/15	0.72	120	1	60	RITTLING MODEL RH-33	–
7UH-9	SOLID HANDLING BLDG. 2ND FLOOR	1,340	43.7	4.4	40 P.G.	0.4	180	160	1/10	1.30	120	1	60	RITTLING MODEL RH-86	–
7UH-10	SOLID HANDLING BLDG. 2ND FLOOR	1,550	57.2	5.7	40 P.G.	0.4	180	160	1/8	1.58	120	1	60	RITTLING MODEL RH-108	–
7UH-11	SOLID HANDLING BLDG. 2ND FLOOR	1,550	57.2	5.7	40 P.G.	0.4	180	160	1/8	1.58	120	1	60	RITTLING MODEL RH-108	–
7UH-12	SOLID HANDLING BLDG. 2ND FLOOR	1,550	57.2	5.7	40 P.G.	0.4	180	160	1/8	1.58	120	1	60	RITTLING MODEL RH-108	–
7UH-13	SOLID HANDLING BLDG. 2ND FLOOR	1,550	57.2	5.7	40 P.G.	0.4	180	160	1/8	1.58	120	1	60	RITTLING MODEL RH-108	–
7UH-14	SOLID HANDLING BLDG. 2ND FLOOR	1,120	32.8	3.3	40 P.G.	0.2	180	160	1/10	0.70	120	1	60	RITTLING MODEL RH-63	–
7UH-15	SOLID HANDLING BLDG. 2ND FLOOR	450	12.2	1.2	40 P.G.	0.4	180	160	1/30	0.70	120	1	60	RITTLING MODEL RH-24	–
7UH-16	SOLID HANDLING BLDG. 2ND FLOOR	1,120	32.8	3.3	40 P.G.	0.2	180	160	1/10	0.70	120	1	60	RITTLING MODEL RH-63	–
7UH-17	SOLID HANDLING BLDG. 1ST FLOOR	450	12.2	1.2	40 P.G.	0.4	180	160	1/30	0.70	120	1	60	RITTLING MODEL RH-24	–
7UH-18	SOLID HANDLING BLDG. 1ST FLOOR	450	12.2	1.2	40 P.G.	0.4	180	160	1/30	0.70	120	1	60	RITTLING MODEL RH-24	–

CUH — HORIZONTAL CABINET UNIT HEATER SCHEDULE

TAG NO.	SERVICE	CFM	MBH	WATER SIDE					ELECTRICAL DATA				MANUFACTURER MODEL NUMBER	REMARKS
				GPM	% GLYCOL	WPD (FT)	EWT (°F)	LWT (°F)	HP	V	PH	HZ		
7CUH-1	SOLID HANDLING BLDG. 1ST FLOOR	300	12.5	1.5	40 P.G.	0.4	130	113.2	1/60	120	1	60	RITTLING MODEL RFRC-420	2 ROW COIL

DIFFUSER, REGISTER & GRILLE SCHEDULE

TAG NO.	MODULE SIZE (IN)	SERVICE	CFM RANGE		MAX. NC LEVEL	MANUFACTURER & MODEL NO.	REMARKS
			MIN	MAX			
SR-1	20x12	SUPPLY	500	1800	40	NAILOR 45DL-0	
SR-2	30x12	SUPPLY	1800	2400	40	NAILOR 45DL-0	
SR-3	50x12	SUPPLY	2500	3810	40	NAILOR 45DL-0	
SR-4	70x12	SUPPLY	3800	5000	40	NAILOR 45DL-0	
ER-1	18x12	RETURN	500	1000	40	NAILOR 6755H-HD	
ER-2	30x12	RETURN	1000	1600	40	NAILOR 6755H-HD	
ER-3	36x18	RETURN	1600	2500	40	NAILOR 6755H-HD	
ER-4	30x24	RETURN	2500	2800	40	NAILOR 6755H-HD	
ER-5	42x30	RETURN	2800	4400	40	NAILOR 6755H-HD	

PREPARED BY

BETA
www.BETA-Inc.com

REGISTERED PROFESSIONAL

COMMONWEALTH OF MASSACHUSETTS
ROBERT H. BOHN
MECHANICAL
NO. 45595
REGISTERED PROFESSIONAL ENGINEER

SUBCONSULTANT

SAR ENGINEERING, INC.
Mechanical/Electrical Engineers
150 Grossman Drive, Suite 309
Braintree, Massachusetts 02184
617 328-9215
web: www.sar.com

PROJECT

Taunton Wastewater Treatment Facility Improvements Solids Handling

Taunton, MA

TITLE

Hvac Schedules

AS RE-ISSUED PER ADDENDUM #2

NO.	REVISIONS	DATE

DRAWN BY:	RLB
DESIGNED BY:	RHB
CHECKED BY:	RHB
ISSUE DATE:	10/16/2020
BETA JOB NO.:	6050

SCALE

NONE

UNLESS OTHERWISE NOTED OR CHANGED BY REPRODUCTION

SHEET NO.

H-0.3

1/13/2021 12:45 PM W:\YEAR - 2018\18009.00 - TAUNTON WWTF UPGRADES\HVAC DEPARTMENT\PHASE 1A\18009.00 HVAC LEGEND SCHEDULE AND DETAILS-PHASE 1A.DWG (BETA STB BW.STB)

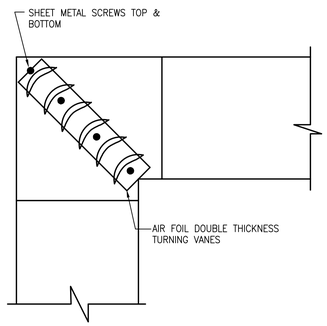

NOTE:
PROVIDE TURNING VANES IN ALL 90° DUCT ELBOWS HAVING A CENTERLINE RADIUS LESS THEN 1/2 TIMES THE DUCT WIDTH.

1 TYPICAL 90° DUCT ELBOW DETAIL
NO SCALE

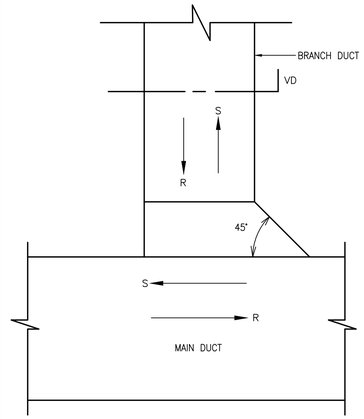

2 BRANCH DUCT CONNECTION DETAIL
NO SCALE

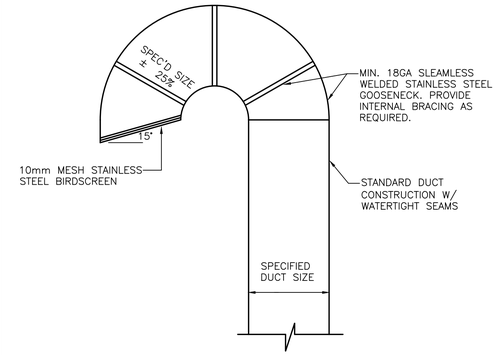

3 GOOSENECK DETAIL
NO SCALE

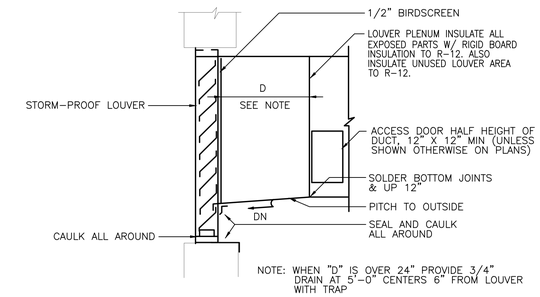

NOTE: WHEN "D" IS OVER 24" PROVIDE 3/4" DRAIN AT 5'-0" CENTERS 6" FROM LOUVER WITH TRAP

4 LOUVER CONNECTION
NO SCALE

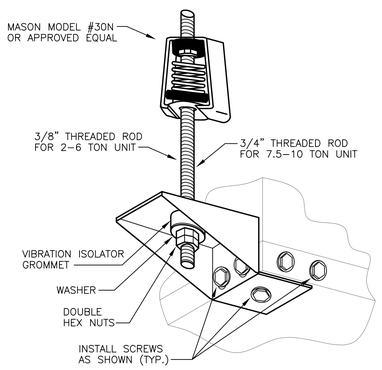

5 HORIZONTAL HEAT PUMP UNIT HANGER KIT ASSEMBLY
NO SCALE

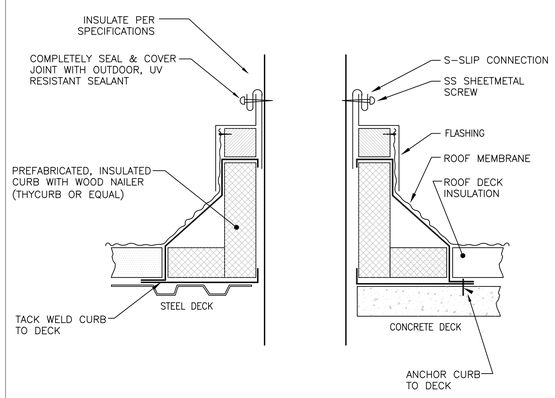

6 DUCT PENETRATION THRU ROOF DETAIL
NO SCALE

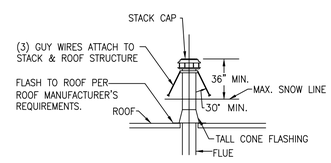

7 FLUE & INTAKE THRU ROOF DETAIL
NO SCALE

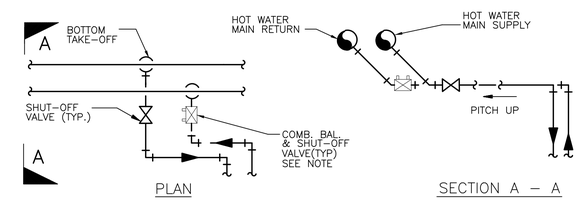

BRANCH PIPING TAKE-OFF TO UNITS OR RADIATION THAT ARE LOCATED BELOW THE MAINS

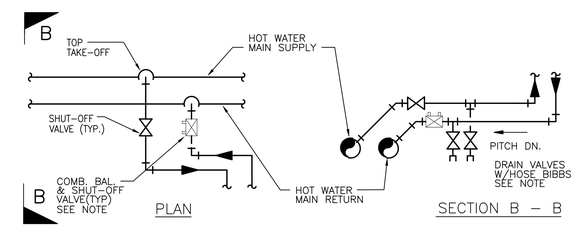

BRANCH PIPING TAKE-OFF TO UNITS OR RADIATION THAT ARE LOCATED ABOVE THE MAINS

NOTE: COMBINATION FLOW MEASURING, BALANCING AND SHUT-OFF VALVES REQUIRED ON ALL BRANCHES 1 1/2" AND LARGER. PROVIDE BALL VALVES ONLY FOR ALL BRANCHES 1 1/4" AND SMALLER. PROVIDE 3/4" DRAIN VALVES WITH HOSE BIBBS CONNECTION AS SHOWN ON ALL BRANCHES 1 1/2" AND LARGER. COMBINATION FLOW MEASURING, BALANCING AND SHUT-OFF VALVES, AND DRAIN VALVES WITH HOSE BIBBS ARE ALSO REQUIRED ON ALL BRANCHES, 2 1/2" AND LARGER FROM ALL VERTICAL RISERS. SEE SPECIFICATION SECTION 15500 FOR VALVE REQUIREMENTS.

8 TYPICAL PIPING BRANCH TAKE-OFF DETAIL
NO SCALE

PREPARED BY

BETA
www.BETA-Inc.com

REGISTERED PROFESSIONAL

COMMONWEALTH OF MASSACHUSETTS
ROBERT H. BOHN
MECHANICAL
NO. 45295
REGISTERED PROFESSIONAL ENGINEER

SUBCONSULTANT

SAR ENGINEERING, INC.
Mechanical/Electrical Engineers
150 Grossman Drive, Suite 309
Braintree, Massachusetts 02184
617 328-9215
web: www.sar.com

PROJECT

Taunton Wastewater Treatment Facility Improvements Solids Handling

Taunton, MA

TITLE

Hvac Details

AS RE-ISSUED PER ADDENDUM #2

NO.	REVISIONS	DATE

DRAWN BY:	RLB
DESIGNED BY:	RHB
CHECKED BY:	RHB
ISSUE DATE:	10/16/2020
BETA JOB NO.:	6050

SCALE

NONE

UNLESS OTHERWISE NOTED OR CHANGED BY REPRODUCTION

SHEET NO.

H-0.4

1/13/2021 12:45 PM W:\YEAR - 2018\18009.00 - TAUNTON WWTF UPGRADES\HVAC DEPARTMENT\PHASE 1A\18009.00 HVAC LEGEND SCHEDULE AND DETAILS-PHASE 1A.DWG (BETA STB BW.STB)

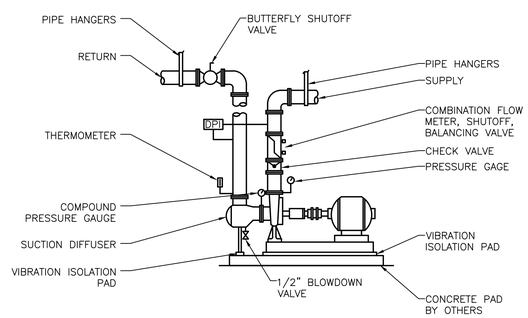

9 BASE MOUNTED PUMP PIPING DETAIL
NO SCALE

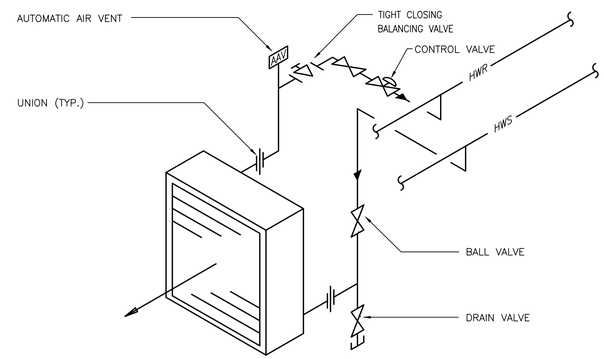

10 UNIT HEATER PIPING DETAIL
NO SCALE

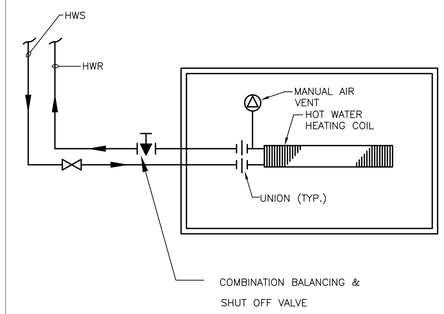

11 HORIZONTAL CABINET HEATER PIPING DETAIL
NO SCALE

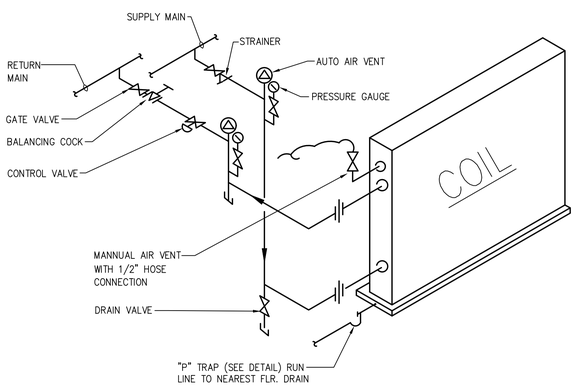

12 SINGLE COIL PIPING DETAIL
NO SCALE

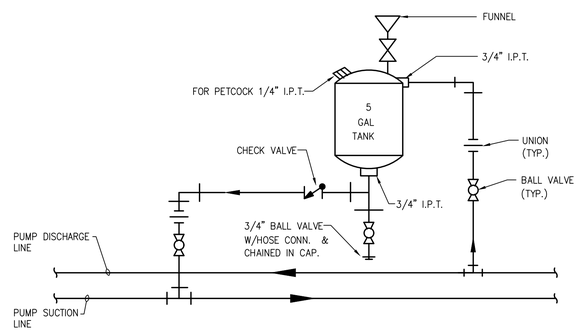

13 CHEMICAL SHOT FEEDER PIPING DETAIL
NO SCALE

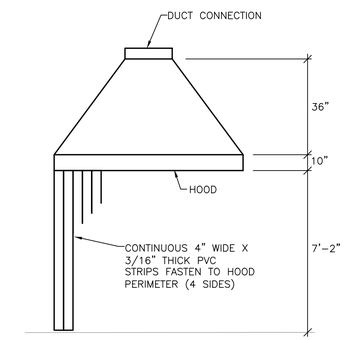

14 TYPICAL EXHAUST HOOD
NO SCALE

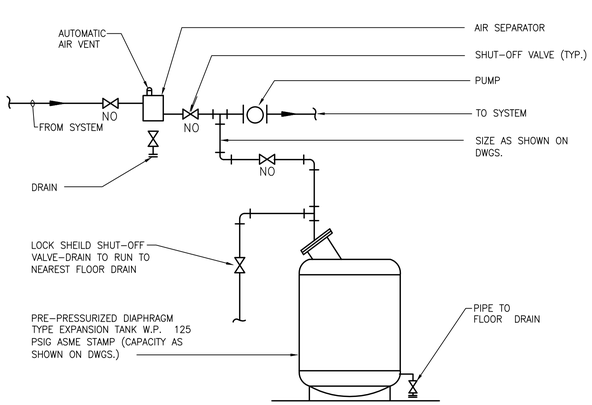

15 TYPICAL DETAIL PIPING CONNECTIONS TO EXPANSION TANKS
NO SCALE

PREPARED BY

BETA
www.BETA-Inc.com

REGISTERED PROFESSIONAL

COMMONWEALTH OF MASSACHUSETTS
ROBERT H. BROWN
MECHANICAL
NO. 45595
REGISTERED PROFESSIONAL ENGINEER

SUBCONSULTANT

SAR ENGINEERING, INC.

Mechanical/Electrical Engineers
150 Grossman Drive, Suite 309
Braintree, Massachusetts 02184
617 328-9215
web: www.sar.com

PROJECT

Taunton Wastewater Treatment Facility Improvements Solids Handling

Taunton, MA

TITLE

Hvac Details

AS RE-ISSUED PER ADDENDUM #2

NO.	REVISIONS	DATE

DRAWN BY:	RLB
DESIGNED BY:	RHB
CHECKED BY:	RHB
ISSUE DATE:	10/16/2020
BETA JOB NO.:	6050

SCALE

NONE

UNLESS OTHERWISE NOTED OR CHANGED BY REPRODUCTION

SHEET NO.

H-0.5

1/13/2021 12:46 PM W:\YEAR - 2018\18009.00 - TAUNTON WWTF UPGRADES\HVAC DEPARTMENT\PHASE 1A\18009.00 HVAC LEGEND SCHEDULE AND DETAILS-PHASE 1A.DWG (BETA STB BW.STB)

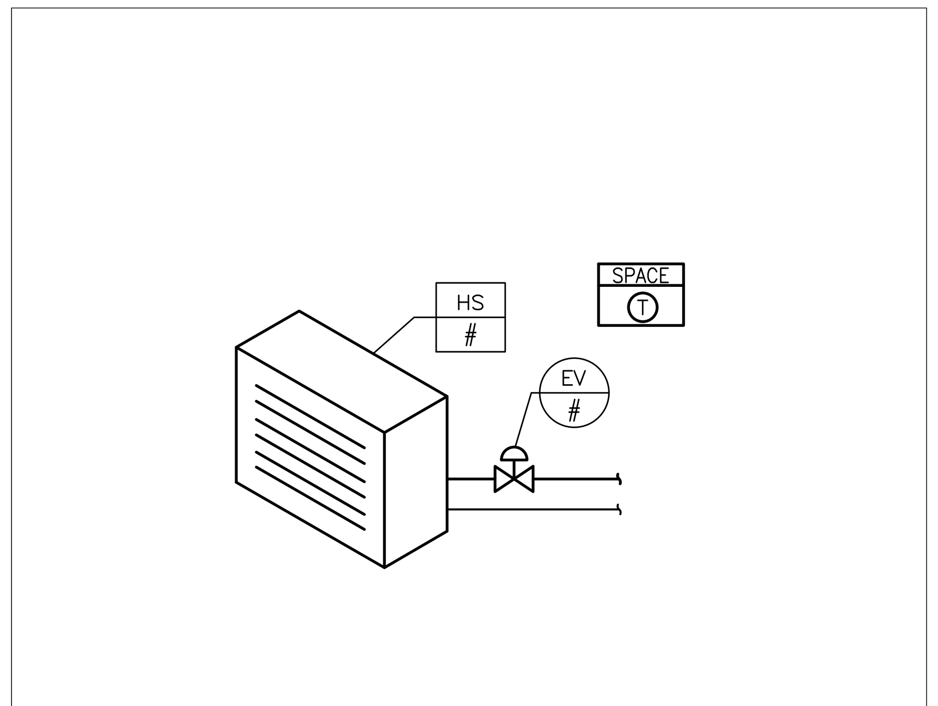

1 TYPICAL UNIT HEATER CONTROL DIAGRAM
NO SCALE

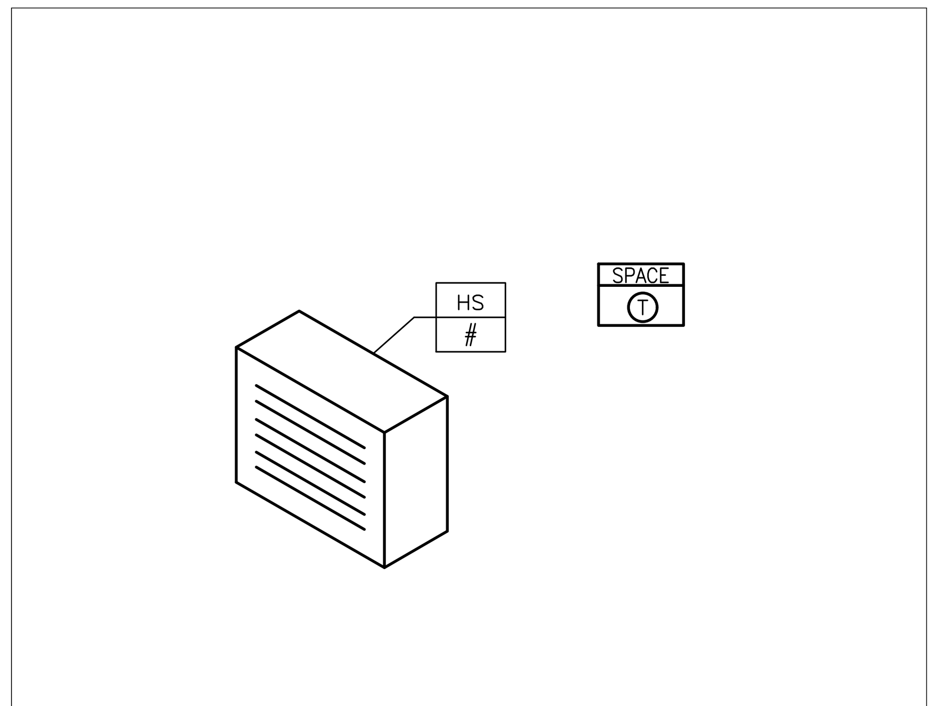

2 TYPICAL ELECTRIC CABINET & UNIT HEATER CONTROL DIAGRAM
NO SCALE

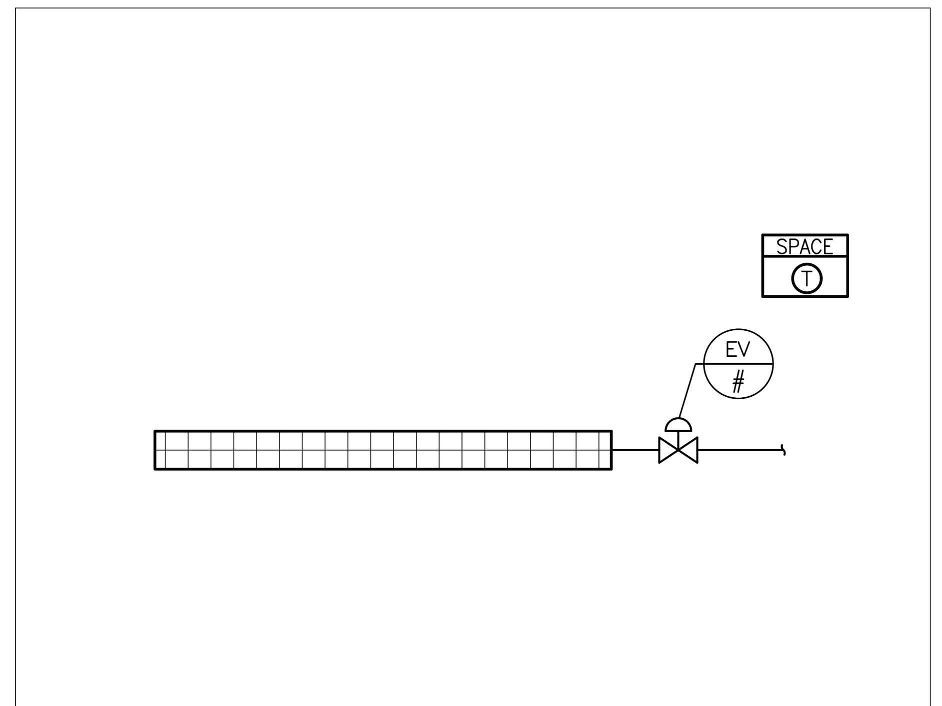

3 TYPICAL BASEBOARD HEAT CONTROL DIAGRAM
NO SCALE

CONTROLS LEGEND

Symbol	Description
SPACE T O #	WALL MOUNTED SPACE TEMPERATURE THERMOSTAT AND/OR OCCUPANCY OVER-RIDE BUTTON
T #	WATER TEMPERATURE SENSOR/THERMOSTAT
FS #	DIFFERENTIAL PRESSURE FLOW SENSOR (AIR) PADDLE FLOW SENSOR (WATER)
DP #	FILTER DIFFERENTIAL SENSOR
VS #	VELOCITY TRANDUCER
AO #	ANALOG OUTPUT FROM EMS
EV #	ELECTRONIC VALVE ACTUATOR
EM #	ELECTRONIC DAMPER MOTOR ACTUATOR
T #	DUCT MOUNTED TEMPERATURE SENSOR/THERMOSTAT
H #	DUCT MOUNTED RELATIVE HUMIDITY SENSOR
LT #	DUCT MOUNTED LOW TEMP. FREEZE THERMOSTAT
T #	DUCT MOUNTED AVERAGING THERMOSTAT
EM #	ELECTRONIC MOTORIZED DAMPER ACTUATOR
HOA #	HAND-AUTO-OFF STARTER
SD #	DUCT SMOKE DETECTOR (FURNISHED BY OTHERS)
OC #	OCCUPANCY SENSOR (COORDINATE W/ ELECTRICAL)
AL #	ALARM (DIGITAL AND ANALOG)
SM #	KITCHEN HOOD SMOKE SENSOR
VS #	VELOCITY SENSOR
CO_2 #	CO_2 SENSOR
CO	CO SENSOR
S/S #	START-STOP
SC #	SPEED CONTROL
RI #	RELAY INPUT
ASC	APPLICATION SPECIFIC CONTROLLER
BC	BUILDING CONTROLLER
CAC	CUSTOM APPLICATION CONTROLLER
DDCFP	DDC FIELD PANEL
⊗	CONNECT NEW TO EXISTING

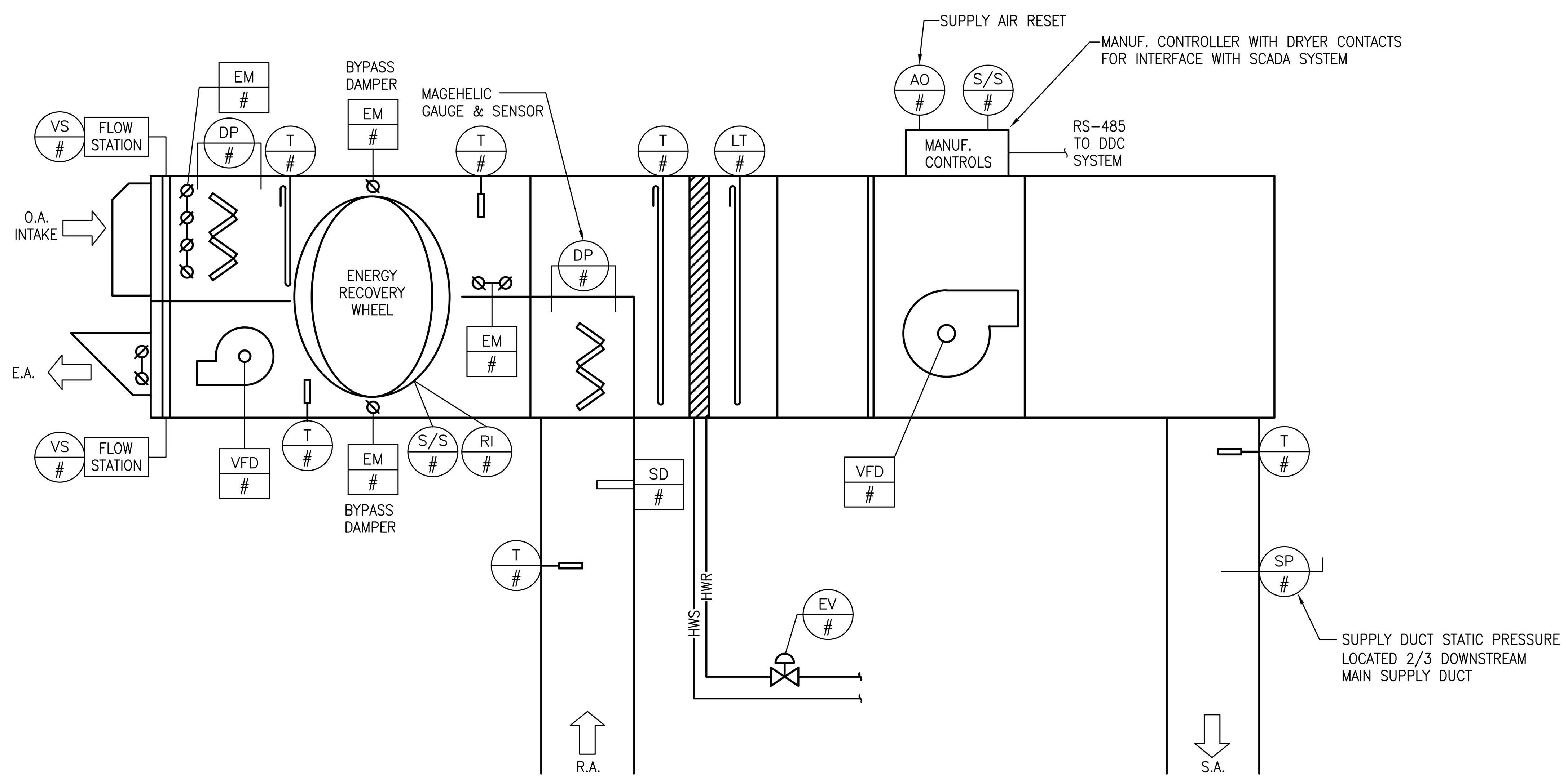

8 TYPICAL ENERGY RECOVERY UNIT CONTROL DIAGRAM
NO SCALE

PREPARED BY
BETA
www.BETA-Inc.com

REGISTERED PROFESSIONAL

SUBCONSULTANT
SAR ENGINEERING, INC.
Mechanical/Electrical Engineers
150 Grossman Drive, Suite 309
Braintree, Massachusetts 02184
617 328-9215
web: www.sar.com

PROJECT
Taunton Wastewater Treatment Facility Improvements Solids Handling
Taunton, MA

TITLE
Hvac Details

AS RE-ISSUED PER ADDENDUM #2

NO.	REVISIONS	DATE

DRAWN BY:	RLB
DESIGNED BY:	RHB
CHECKED BY:	RHB
ISSUE DATE:	10/16/2020
BETA JOB NO.:	6050

SCALE
NONE
UNLESS OTHERWISE NOTED OR CHANGED BY REPRODUCTION

SHEET NO.
H-0.6

1/13/2021 12:46 PM W:\YEAR - 2018\18009.00 - TAUNTON WWTF UPGRADES\HVAC DEPARTMENT\PHASE 1A\18009.00 HVAC LEGEND SCHEDULE AND DETAILS-PHASE 1A.DWG (BETA STB BW.STB)

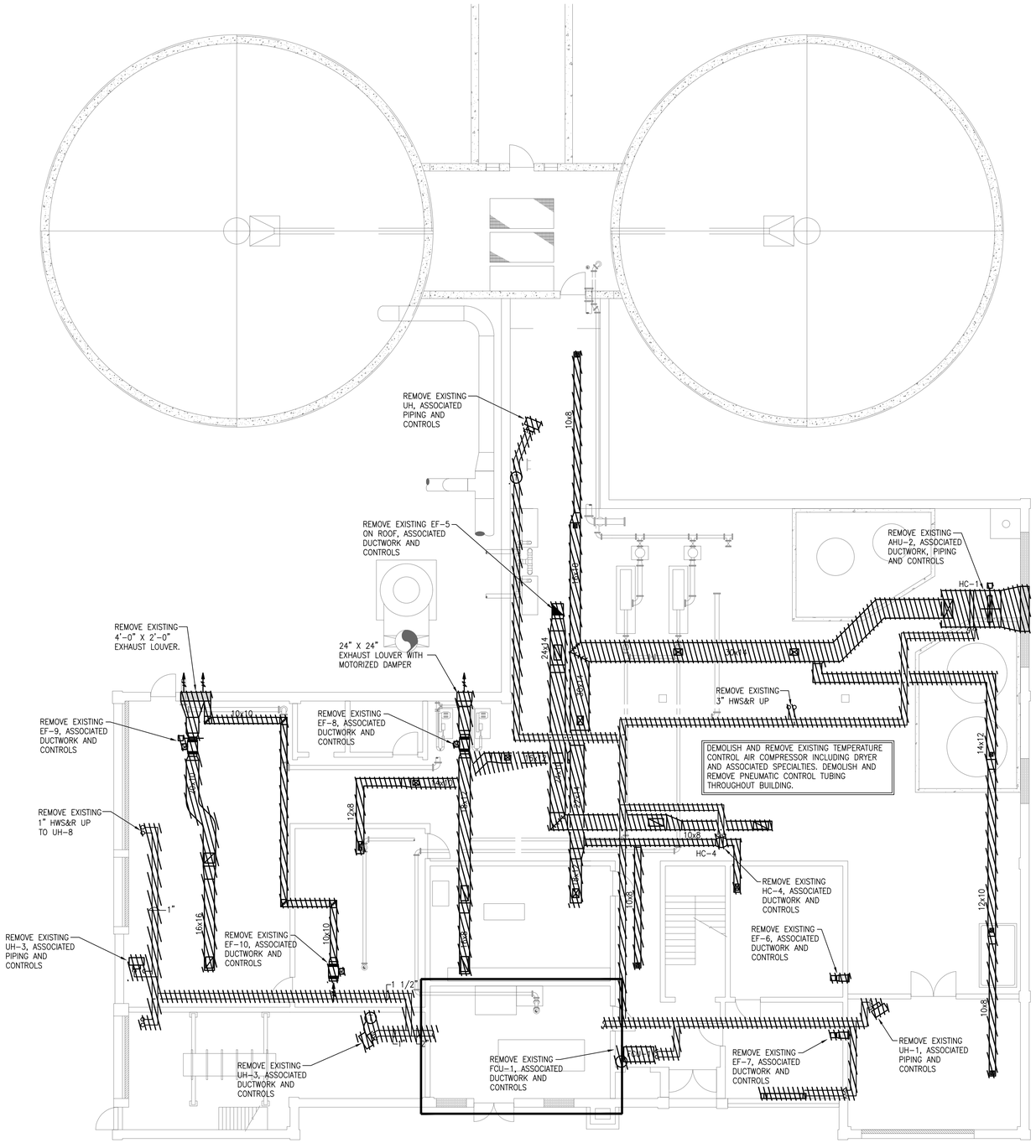

FIRST FLOOR - PLAN

SCALE: 1/8"= 1'-0"

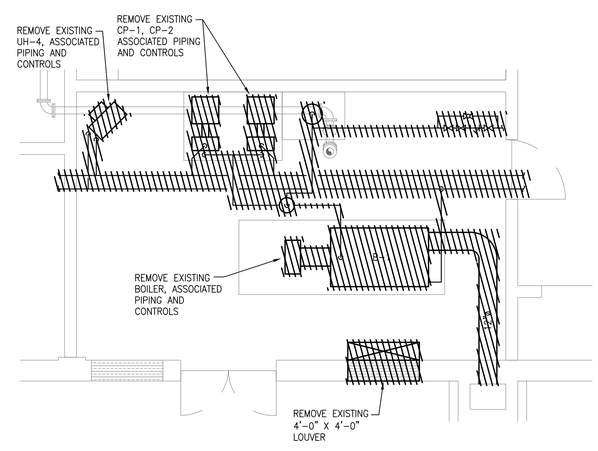

BOILER ROOM PART PLAN

SCALE: 1/4"= 1'-0"

PREPARED BY

BETA
www.BETA-Inc.com

REGISTERED PROFESSIONAL

COMMONWEALTH OF MASSACHUSETTS
ROBERT H. BOHN
MECHANICAL
NO. 45595
REGISTERED PROFESSIONAL ENGINEER

SUBCONSULTANT

SAR ENGINEERING, INC.

Mechanical/Electrical Engineers
150 Grossman Drive, Suite 309
Braintree, Massachusetts 02184
617 328-9215
web: www.sar.com

PROJECT

Taunton Wastewater Treatment Facility Improvements Solids Handling

Taunton, MA

TITLE

Hvac Demoltion
Solids Handling
Building
First Floor Plan

AS RE-ISSUED PER ADDENDUM #2

NO.	REVISIONS	DATE

DRAWN BY:	RLB
DESIGNED BY:	RHB
CHECKED BY:	RHB
ISSUE DATE:	10/16/2020
BETA JOB NO.:	6050

SCALE

AS SHOWN

UNLESS OTHERWISE NOTED OR CHANGED BY REPRODUCTION

SHEET NO.

H-7.1

1/13/2021 12:46 PM W:\YEAR - 2018\18009.00 - TAUNTON WWTF UPGRADES\HVAC DEPARTMENT\PHASE 1A\18009.00 HVAC SOLIDS HANDLING BUILDING-PHASE 1A.DWG (BETA STB BW.STB)

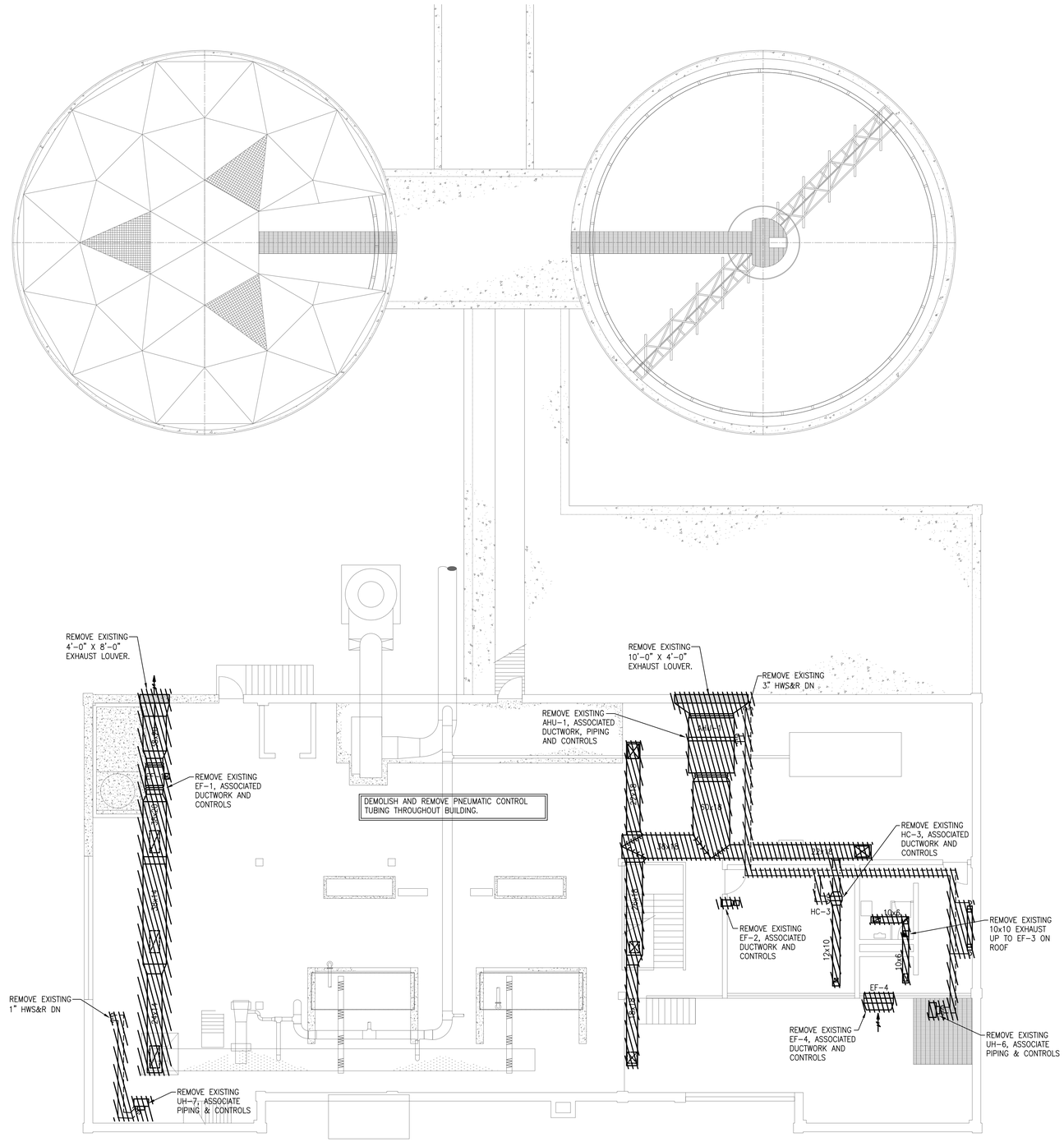

SECOND FLOOR - PLAN

SCALE: 1/8"= 1'-0"

PREPARED BY

BETA
www.BETA-Inc.com

REGISTERED PROFESSIONAL

COMMONWEALTH OF MASSACHUSETTS
ROBERT H. BOHN
MECHANICAL
NO. 45535
REGISTERED PROFESSIONAL ENGINEER

SUBCONSULTANT

SAR ENGINEERING, INC.

Mechanical/Electrical Engineers
150 Grossman Drive, Suite 309
Braintree, Massachusetts 02184
617 328-9215
web: www.sar.com

PROJECT

Taunton Wastewater Treatment Facility Improvements Solids Handling

Taunton, MA

TITLE

Hvac Demolition Solids Handling Building Second Floor Plan

AS RE-ISSUED PER ADDENDUM #2

NO.	REVISIONS	DATE

DRAWN BY:	RLB
DESIGNED BY:	RHB
CHECKED BY:	RHB
ISSUE DATE:	10/16/2020
BETA JOB NO.:	6050

SCALE

AS SHOWN

UNLESS OTHERWISE NOTED OR CHANGED BY REPRODUCTION

SHEET NO.

H-7.2

1/13/2021 12:46 PM W:\YEAR - 2018\18009.00 - TAUNTON WWTF UPGRADES\HVAC DEPARTMENT\PHASE 1A\18009.00 HVAC SOLIDS HANDLING BUILDING-PHASE 1A.DWG (BETA STB BW.STB)

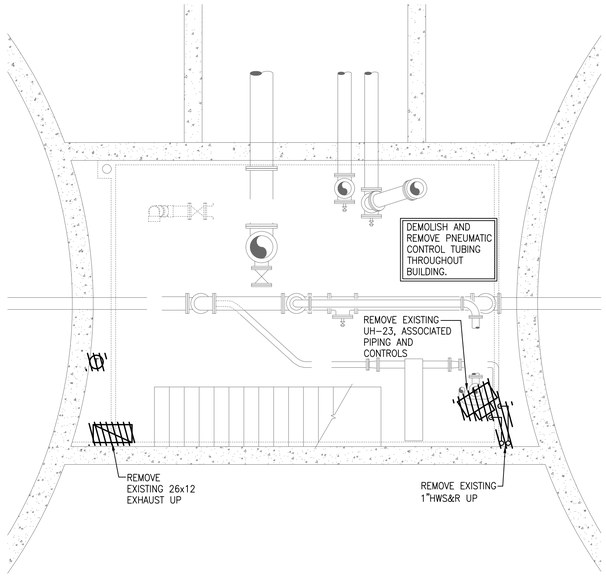

LOWER LEVEL - PLAN

SCALE: 1/4"= 1'-0"

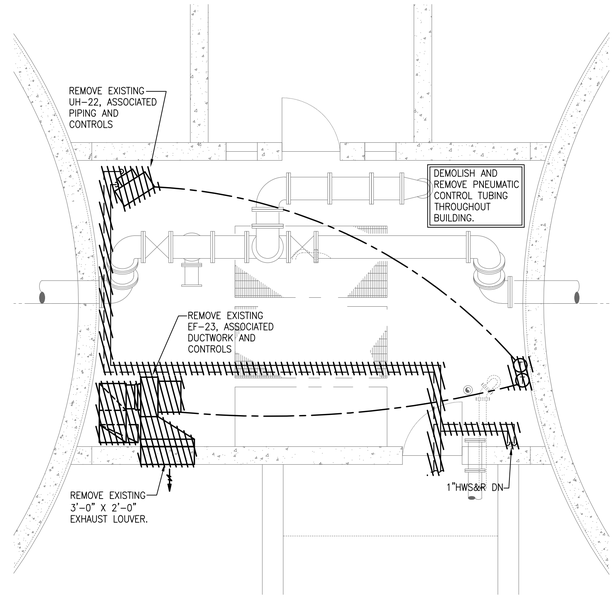

UPPER LEVEL - PLAN

SCALE: 1/4"= 1'-0"

PREPARED BY

BETA
www.BETA-Inc.com

REGISTERED PROFESSIONAL

COMMONWEALTH OF MASSACHUSETTS
ROBERT H. BOHN
MECHANICAL
NO. 45035
REGISTERED PROFESSIONAL ENGINEER

SUBCONSULTANT

SAR ENGINEERING, INC.

Mechanical/Electrical Engineers
150 Grossman Drive, Suite 309
Braintree, Massachusetts 02184
617 328-9215
web: www.sar.com

PROJECT

Taunton Wastewater Treatment Facility Improvements Solids Handling

Taunton, MA

TITLE

Hvac Demolition
Solids Handling
Building
Plans

AS RE-ISSUED PER ADDENDUM #2

NO.	REVISIONS	DATE

DRAWN BY:	RLB
DESIGNED BY:	RHB
CHECKED BY:	RHB
ISSUE DATE:	10/16/2020
BETA JOB NO.:	6050

SCALE

AS SHOWN

UNLESS OTHERWISE NOTED OR CHANGED BY REPRODUCTION

SHEET NO.

H-7.3

1/13/2021 12:47 PM W:\YEAR - 2018\18009.00 - TAUNTON WWTF UPGRADES\HVAC DEPARTMENT\PHASE 1A\18009.00 HVAC SOLIDS HANDLING BUILDING-PHASE 1A.DWG (BETA STB BW.STB)

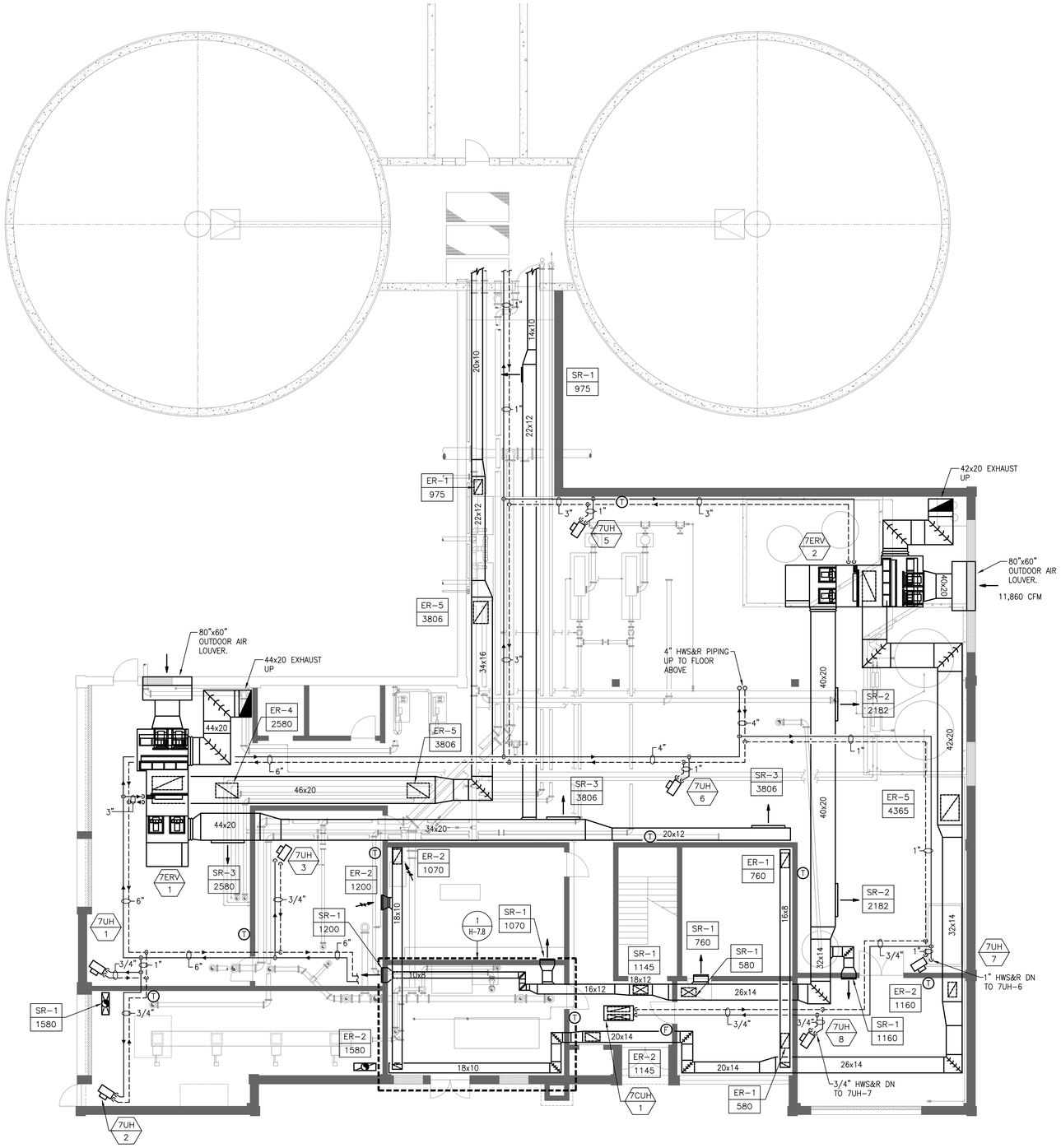

FIRST FLOOR - PLAN

SCALE: 1/8"= 1'-0"

PREPARED BY

BETA
www.BETA-Inc.com

REGISTERED PROFESSIONAL

COMMONWEALTH OF MASSACHUSETTS
ROBERT H. BOHN
MECHANICAL
NO. 45535
REGISTERED PROFESSIONAL ENGINEER

SUBCONSULTANT

SAR ENGINEERING, INC.

Mechanical/Electrical Engineers
150 Grossman Drive, Suite 309
Braintree, Massachusetts 02184
617 328-9215
web: www.sar.com

PROJECT

Taunton Wastewater Treatment Facility Improvements Solids Handling

Taunton, MA

TITLE

Hvac New Work
Solids Handling
Building
First Floor Plan

AS RE-ISSUED PER ADDENDUM #2

NO.	REVISIONS	DATE

DRAWN BY:	RLB
DESIGNED BY:	RHB
CHECKED BY:	RHB
ISSUE DATE:	10/16/2020
BETA JOB NO.:	6050

SCALE

AS SHOWN

UNLESS OTHERWISE NOTED OR CHANGED BY REPRODUCTION

SHEET NO.

H-7.4

1/13/2021 12:47 PM W:\YEAR - 2018\18009.00 - TAUNTON WWTF UPGRADES\HVAC DEPARTMENT\PHASE 1A\18009.00 HVAC SOLIDS HANDLING BUILDING-PHASE 1A.DWG (BETA STB BW.STB)

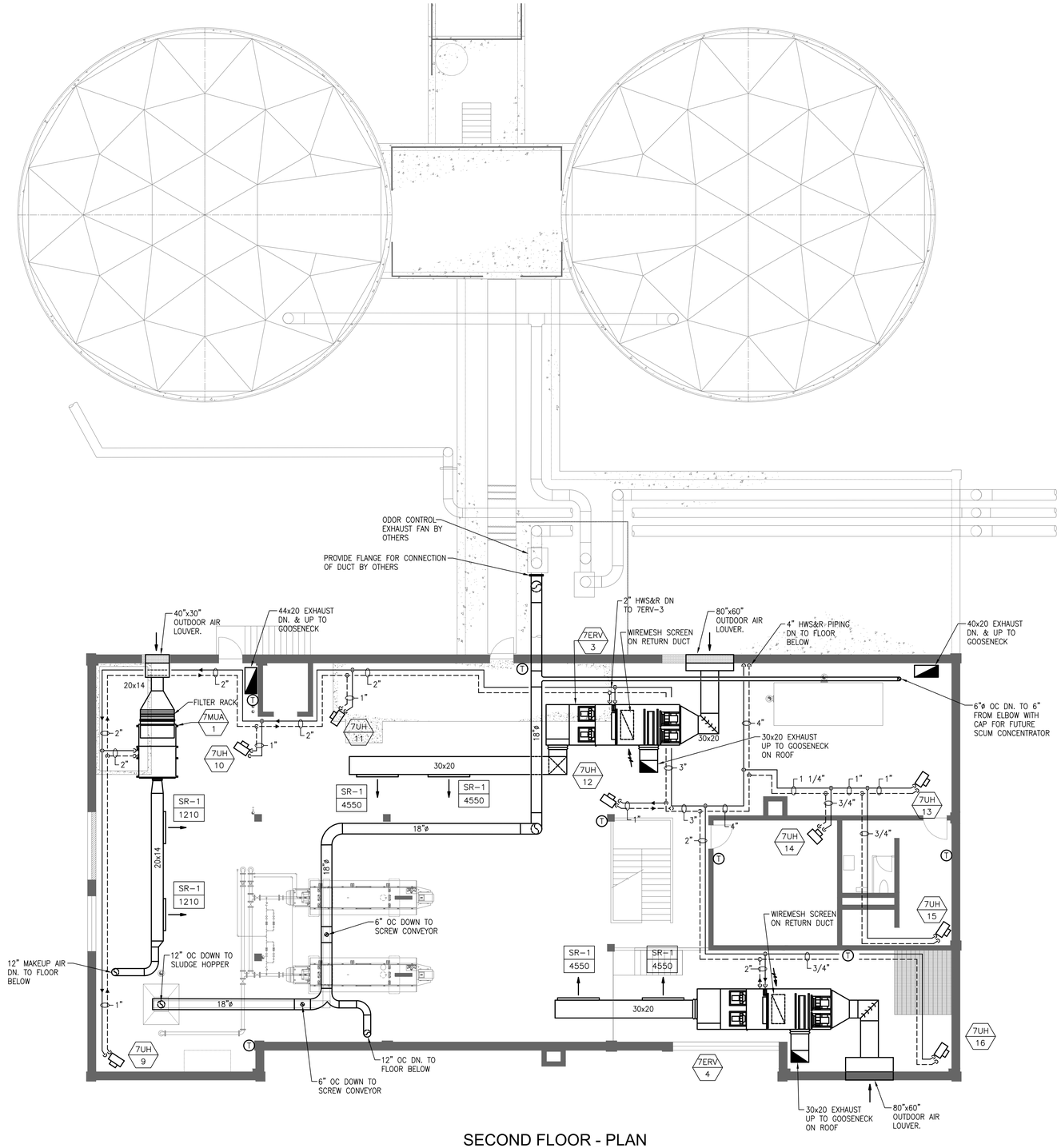

SECOND FLOOR - PLAN

SCALE: 1/8"= 1'-0"

PREPARED BY

BETA
www.BETA-Inc.com

REGISTERED PROFESSIONAL

COMMONWEALTH OF MASSACHUSETTS
ROBERT H. BROWN
MECHANICAL
NO. 45595
REGISTERED PROFESSIONAL ENGINEER

SUBCONSULTANT

SAR ENGINEERING, INC.

Mechanical/Electrical Engineers
150 Grossman Drive, Suite 309
Braintree, Massachusetts 02184
617 328-9215
web: www.sar.com

PROJECT

Taunton Wastewater Treatment Facility Improvements Solids Handling

Taunton, MA

TITLE

Hvac New Work
Solids Handling
Building
Second Floor
Plan

AS RE-ISSUED PER ADDENDUM #2

NO.	REVISIONS	DATE

DRAWN BY:	RLB
DESIGNED BY:	RHB
CHECKED BY:	RHB
ISSUE DATE:	10/16/2020
BETA JOB NO.:	6050

SCALE

AS SHOWN

UNLESS OTHERWISE NOTED OR CHANGED BY REPRODUCTION

SHEET NO.

H-7.5

1/13/2021 12:48 PM W:\YEAR - 2018\18009.00 - TAUNTON WWTF UPGRADES\HVAC DEPARTMENT\PHASE 1A\18009.00 HVAC SOLIDS HANDLING BUILDING-PHASE 1A.DWG (BETA STB BW.STB)

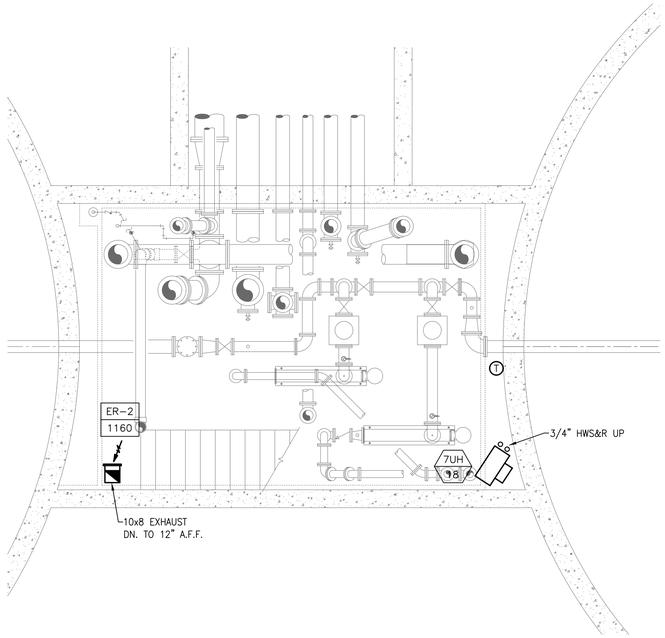

LOWER LEVEL - PLAN

SCALE: 1/4"= 1'-0"

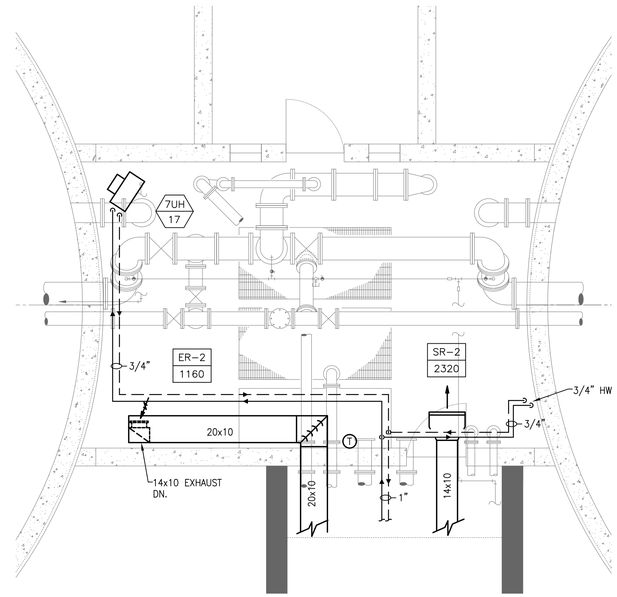

UPPER LEVEL - PLAN

SCALE: 1/4"= 1'-0"

PREPARED BY

BETA
www.BETA-Inc.com

REGISTERED PROFESSIONAL

COMMONWEALTH OF MASSACHUSETTS
ROBERT H. BOHN
MECHANICAL
NO. 45035
REGISTERED PROFESSIONAL ENGINEER

SUBCONSULTANT

SAR ENGINEERING, INC.

Mechanical/Electrical Engineers
150 Grossman Drive, Suite 309
Braintree, Massachusetts 02184
617 328-9215
web: www.sar.com

PROJECT

Taunton Wastewater Treatment Facility Improvements Solids Handling

Taunton, MA

TITLE

Hvac New Work
Solids Handling
Building
Plans

AS RE-ISSUED PER ADDENDUM #2

NO.	REVISIONS	DATE

DRAWN BY:	RLB
DESIGNED BY:	RHB
CHECKED BY:	RHB
ISSUE DATE:	10/16/2020
BETA JOB NO.:	6050

SCALE

AS SHOWN

UNLESS OTHERWISE NOTED OR CHANGED BY REPRODUCTION

SHEET NO.

H-7.6

1/13/2021 12:49 PM W:\YEAR - 2018\18009.00 - TAUNTON WWTF UPGRADES\HVAC DEPARTMENT\PHASE 1A\18009.00 HVAC SOLIDS HANDLING BUILDING-PHASE 1A.DWG (BETA STB BW.STB)

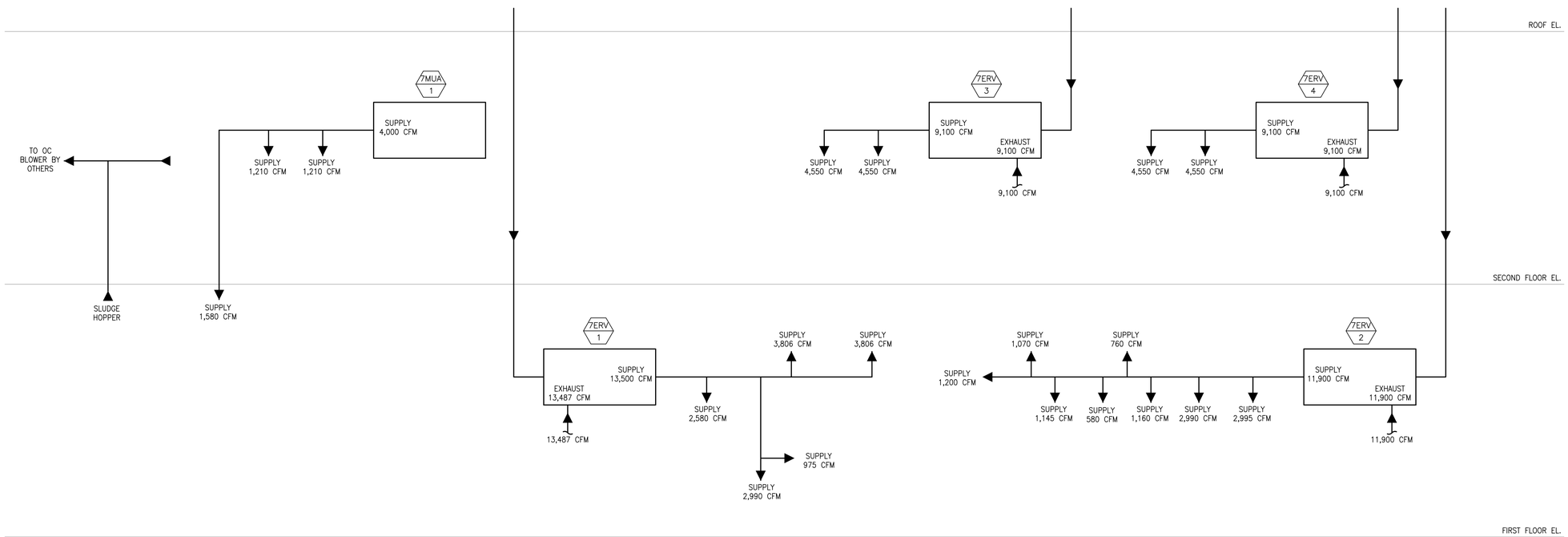

PREPARED BY

BETA
www.BETA-Inc.com

REGISTERED PROFESSIONAL

COMMONWEALTH OF MASSACHUSETTS
ROBERT H. BOHN
MECHANICAL
No. 45595
REGISTERED PROFESSIONAL ENGINEER

SUBCONSULTANT

SAR ENGINEERING, INC.

Mechanical/Electrical Engineers
150 Grossman Drive, Suite 309
Braintree, Massachusetts 02184
617 328-9215
web: www.sar.com

PROJECT

Taunton Wastewater Treatment Facility Improvements Solids Handling

Taunton, MA

TITLE

Hvac Solids Handling Building Air Flow Diagram

AS RE-ISSUED PER ADDENDUM #2

NO.	REVISIONS	DATE

DRAWN BY:	RLB
DESIGNED BY:	RHB
CHECKED BY:	RHB
ISSUE DATE:	10/16/2020
BETA JOB NO.:	6050

SCALE

AS SHOWN

UNLESS OTHERWISE NOTED OR CHANGED BY REPRODUCTION

SHEET NO.

H-7.7

1/13/2021 12:49 PM W:\YEAR - 2018\18009.00 - TAUNTON WWTF UPGRADES\HVAC DEPARTMENT\PHASE 1A\18009.00 HVAC SOLIDS HANDLING BUILDING-PHASE 1A.DWG (BETA STB BW.STB)

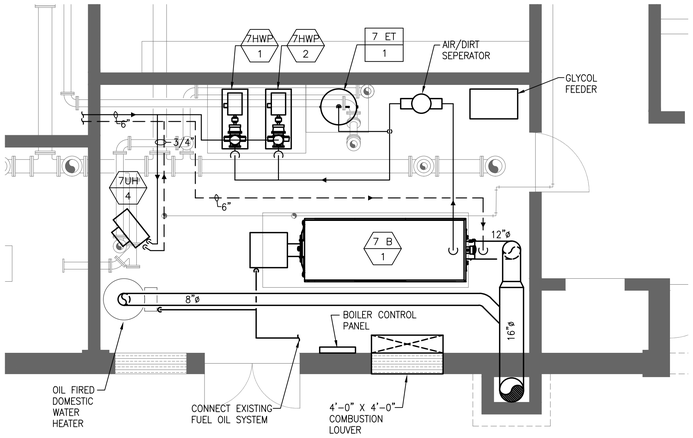

BOILER ROOM PART PLAN

SCALE: 1/4"= 1'-0"

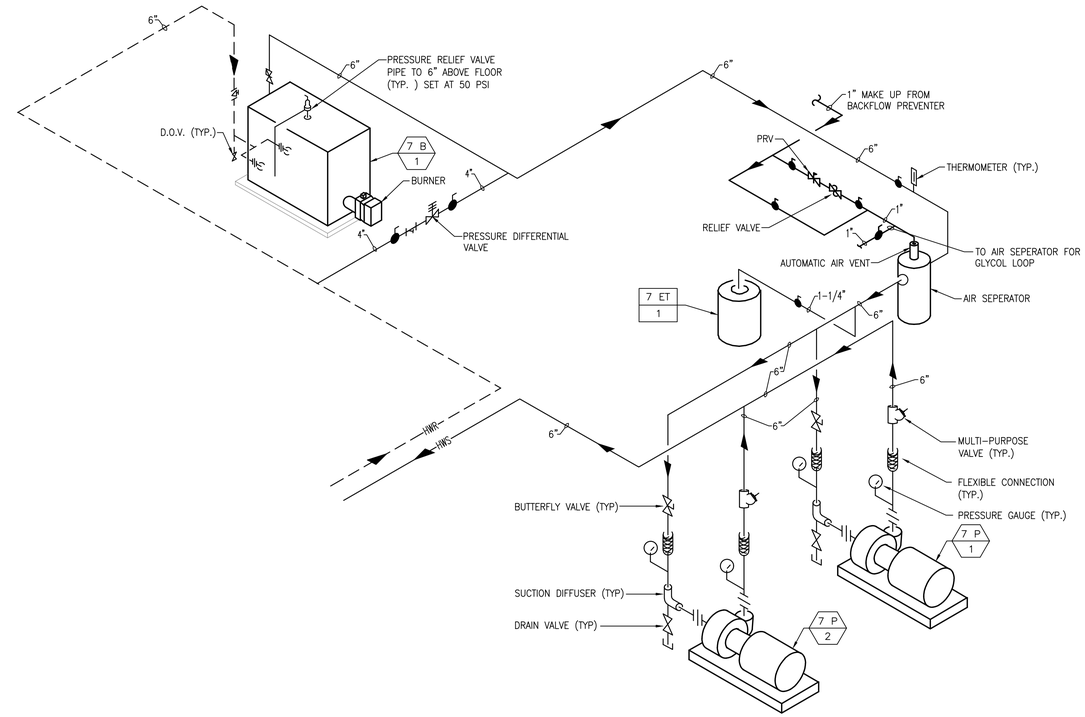

PIPING SCHEMATIC

NO SCALE

PREPARED BY

BETA
www.BETA-Inc.com

REGISTERED PROFESSIONAL

COMMONWEALTH OF MASSACHUSETTS
ROBERT H. BROWN
MECHANICAL
NO. 45935
REGISTERED PROFESSIONAL ENGINEER

SUBCONSULTANT

SAR ENGINEERING, INC.
Mechanical/Electrical Engineers
150 Grossman Drive, Suite 309
Braintree, Massachusetts 02184
617 328-9215
web: www.sar.com

PROJECT

Taunton Wastewater Treatment Facility Improvements Solids Handling

Taunton, MA

TITLE

Hvac New Work
Solids Handling
Building
Boiler Room
Part Plan

AS RE-ISSUED PER ADDENDUM #2

NO.	REVISIONS	DATE

DRAWN BY:	RLB
DESIGNED BY:	RHB
CHECKED BY:	RHB
ISSUE DATE:	10/16/2020
BETA JOB NO.:	6050

SCALE

AS SHOWN

UNLESS OTHERWISE NOTED OR CHANGED BY REPRODUCTION

SHEET NO.

H-7.8

1/13/2021 12:50 PM W:\YEAR - 2018\18009.00 - TAUNTON WWTF UPGRADES\HVAC DEPARTMENT\PHASE 1A\18009.00 HVAC SOLIDS HANDLING BUILDING-PHASE 1A.DWG (BETA STB BW.STB)